REVISIONS				
REV.	ECN	BY	DESCRIPTION	DATE
A	08024	WILL	RALEASE OF PRODUCTION	2021/6/21

受控文件

Control Files

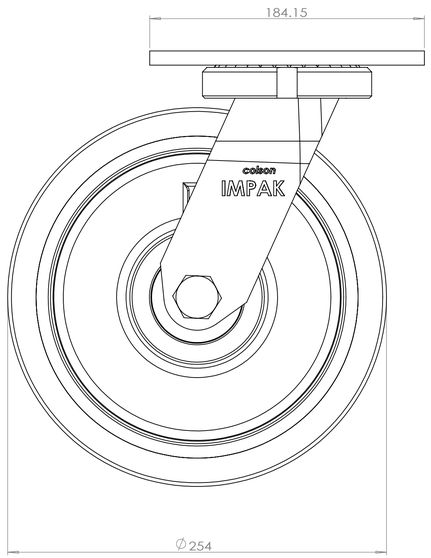

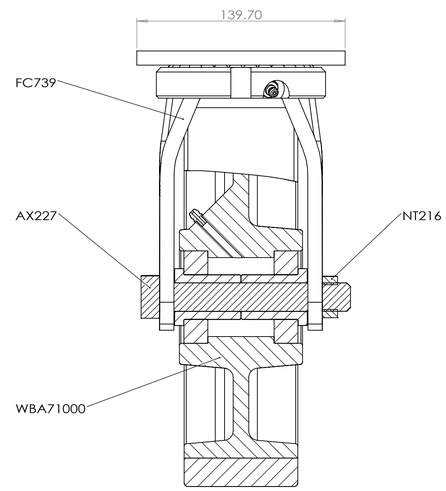

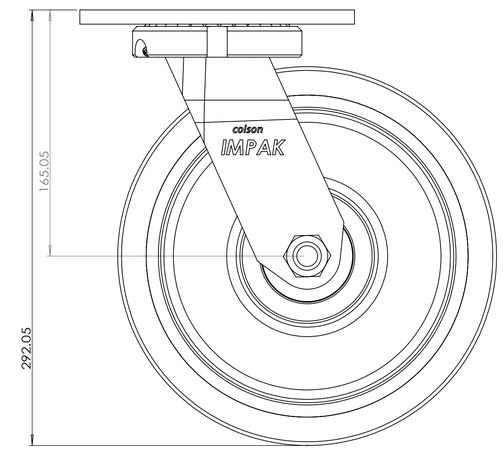

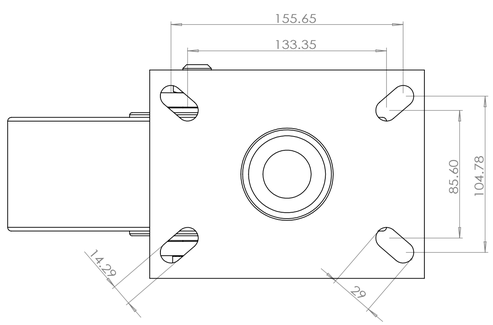

colson GROUP

CHINA

1ST ANGLE PROJECTION

DO NOT SCALE DRAWING

DIMENSIONS ARE IN METRICS

UNSPECIFIED TOLERANCES

.XX ±.13 X.X° ± .5°

.X ±.38 X° ± 1°

X. ±1.3

THE INFORMATION CONTAINED IN THIS DRAWING IS THE SOLE PROPERTY OF COLSON GROUP. ANY REPRODUCTION IN PART OR AS A WHOLE WITHOUT THE WRITTEN PERMISSION OF COLSON GROUP IS PROHIBITED.

INTERPRET DRAWING PER ASME Y14.5-1994

TITLE: 7-10in抗冲击活支配Logic PU包铁芯轮

DWG No.:

PART No.: 7106600

SIZE: A

ENGINEER:	DRAWN:	CHECKED:	ISSUED:
WILL	WILL	KEVIN.Z	21JUN2021

SCALE 1:2 | SHEET 1 OF 1