MAINTENANCE MANUAL

Air-Operated Double Diaphragm Pumps

ALE-5
ALE-15

February 2025

READ INSTRUCTIONS BEFORE OPERATING

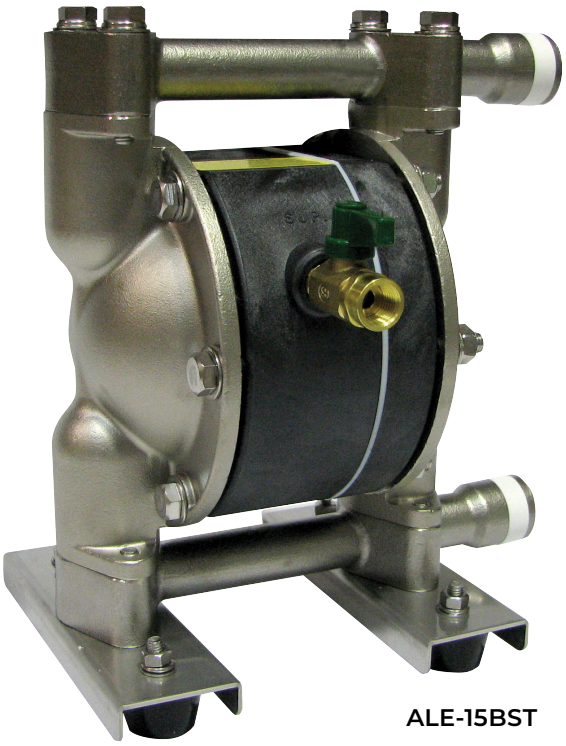

ALE-15BST

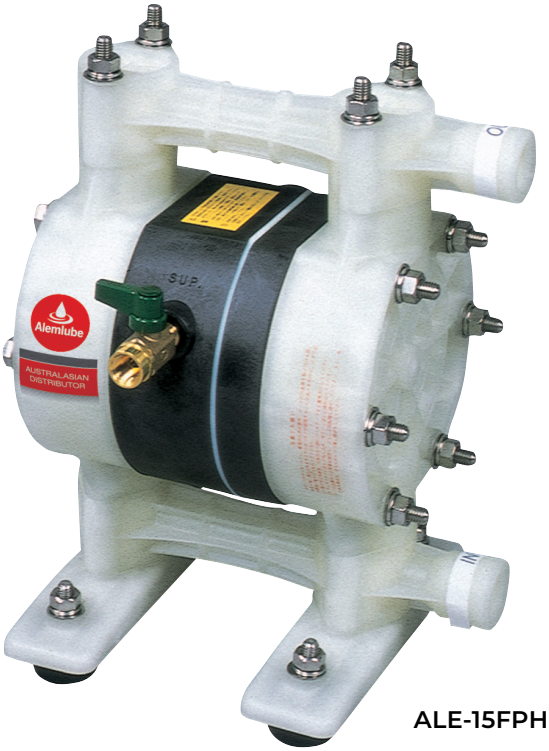

ALE-15FPH

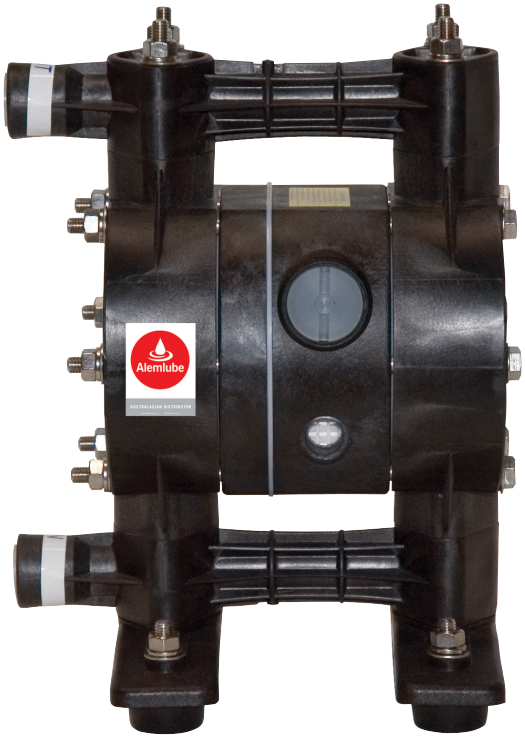

ALE-15FVT

NSW/ACT (02) 9677 1555
QLD/PNG (07) 3491 2600
VIC/TAS (03) 8787 8288
WA (08) 9302 4199
SA/NT (08) 8241 7111
NZ (09) 447 1007
www.alemlube.com.au
www.alemlube.co.nz

⚠ WARNING

- For your own safety, be sure to read these procedures carefully before performing maintenance on this product. After reading this document, be sure to keep it handy for future reference.

This maintenance manual covers what you should know about maintenance of the ALE-5 series and ALE-15 series Diaphragm Pumps.
This edition is based on the standards for the August 2024 production run. Remember, the specifications are always subject to change; therefore, some of the information in this edition may not apply to new specifications.

Warnings and Cautions

For safe use of this product, be sure to note the following: In this document, warnings and cautions are indicated by symbols. These symbols are for those who will operate this product and for those who will be nearby, for safe operation and for prevention of personal injury and property damage. The following warning and caution symbols have the meanings described below. Be sure to remember their meanings.

⚠ WARNING: If you ignore the warning described and operate the product in an improper manner, there is danger of serious bodily injury or death.

⚠ CAUTION : If you ignore the caution described and operate the product in an improper manner, there is danger of personal injury or property damage.

Furthermore, to indicate the type of danger and damage, the following symbols are also used along with those mentioned above:

This symbol indicates a DON'T, and will be accompanied by an explanation on something you must not do.

This symbol indicates a DO, and will be accompanied by instructions on something you must do in a certain situation.

⚠ WARNING

- Before starting maintenance work, cut off the feed air and clean the pump. If air pressure or residue remain in the pump, there is danger of explosion, or possible poisoning resulting in serious injury or death if chemicals adhere to the skin or are accidentally swallowed.
  (For details on cleaning the pump, refer to Chapter 6 of the Operation Manual.)
- When replacing parts, be sure to use the recommended genuine parts or Equivalents. Use of other parts may cause a malfunction of the product.
  (Refer to Parts List the separate sheets.)

⚠ CAUTION

- When it is instructed that special tools must be used, be sure to use the specified tools. Otherwise, the pump may be damaged.
- Refer to “10.1 Specifications” in the Operation Manual. Also, remember that the pump is heavy, and extreme care must be taken when lifting it.

1. Principles of operation

There are two diaphragms fixed to the center rod, one at each end. When compressed air is supplied to air chamber b (right side, see Fig.1.1), the center rod moves to the right, the material in material chamber B is pushed out, and at the same time material is sucked into material chamber A.
When the center rod is moved full-stroke to the right, the air switch valve is switched, compressed air is sent to air chamber a (left side, see Fig.1.2), and the center rod moves to the left. The material in material chamber A is pushed out, and at the same time material is sucked into material chamber B.
Through repetition of this operation, material is repeatedly taken in and discharged out.

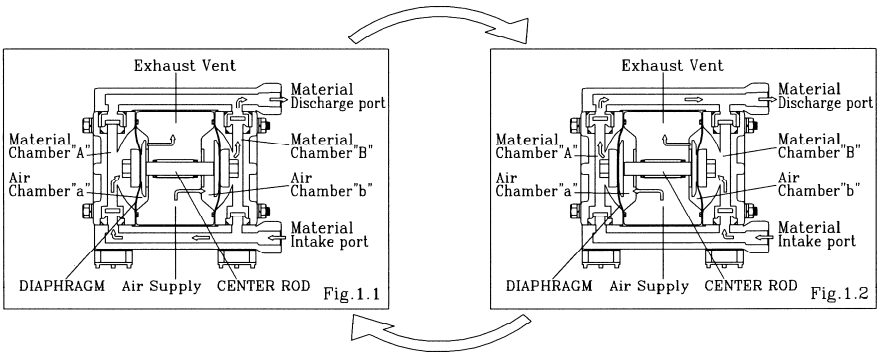

2. Maintenance and Tools

2.1 Maintenance

It is recommended that the pump should be regularly inspected, as this kind of diaphragm pump can be used in many different circumstances such as pressures, temperatures, viscosities, or corrosiveness.
It's very useful for your future reference to keep records of the pump conditions for every inspection.
The regular inspection includes the air valve, diaphragms, balls, valve seats, or O-rings.
When it comes to diaphragms, in particular, both of the diaphragms should be replaced at one time, as they tend to be worn out or have some cracks on the surfaces. Please refer to 'usage range' in each section regarding the frequency of the replacement of the other spare parts.

2.2 General tools

- Socket wrenches — 10 mm(ALE-5), 13 mm(ALE-15)
- Open-end wrenches — 10 mm(ALE-5), 13 mm(ALE-15), 21 mm(ALE-15)
- Plyer

2.3 Special tools (sold separately)

- Cap and disk remover
  Purpose: Removing the center disk of FP□ and FVT types

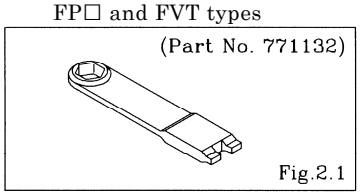

- Sleeve remover
  Purpose: For removing sleeves

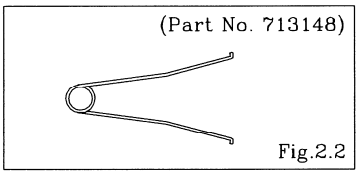

2.4 Misc.

- Assembly oil — Turbine oil none addition class 1(equivalent to ISO VG32 grade)
- Nuts — M6 X 1(ALE-5), M8 X 1.25(ALE-15)
- Grease — Urea grease grade (NLGI) No.2

3. Ordering Replacement parts

For accurate and speedy shipment of parts, be sure to order the right parts for your model to distributor
Indicate the part numbers, descriptions, and quantities.

4. Balls, Flat valves and Valve seats

4.1 Removal

■BAT, BST types

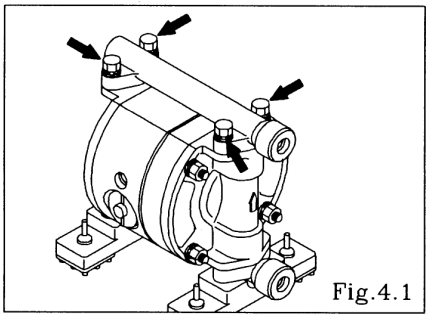
Fig.4.1

- Remove the 4 retainer bolts from the out manifold, and remove the out manifold. [Fig.4.1]

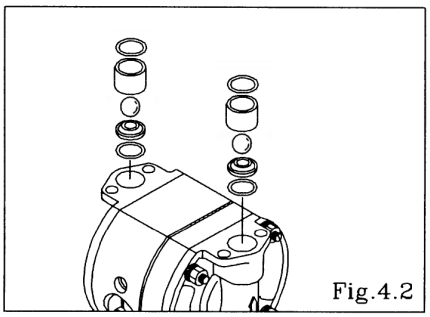
Fig.4.2

- Remove the O ring, valve guide, ball and valve seat. [Fig.4.2]

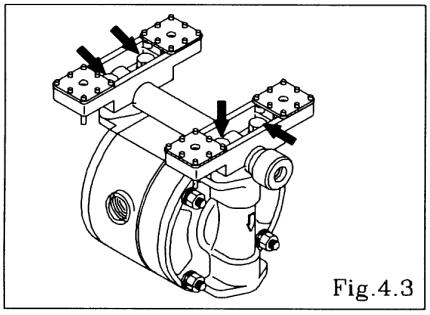
Fig.4.3

- Turn over the main body assembly. [Fig.4.3]
- Remove the 4 retainer bolts from the in manifold, and remove the base and in manifold. [Fig.4.3]

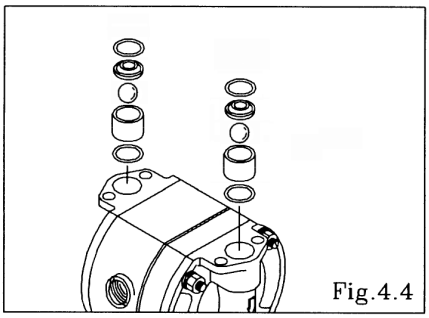
Fig.4.4

- Remove the O ring, valve seat, ball and valve guide. [Fig.4.4]

■FP□, FVT types

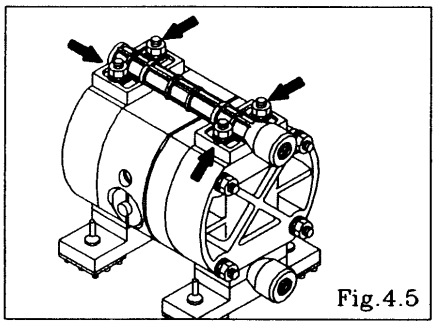
Fig.4.5

- Remove the 4 retainer nuts from the out manifold, and remove the out manifold. [Fig.4.5]

< NOTE >
- When the retainer nuts both side of the tie rod remove, the in manifold removes. (ALE-5)

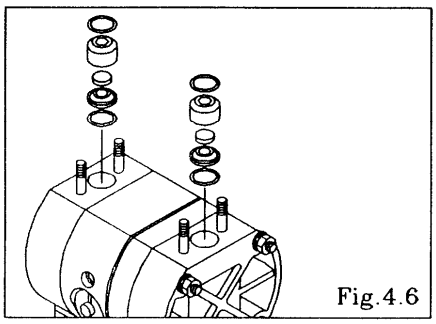
Fig.4.6

- Remove the O ring, valve stopper, flat valve and valve seat. [Fig.4.6]

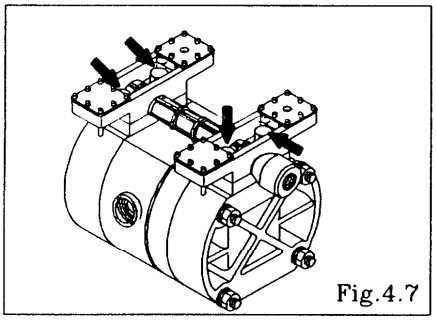
Fig.4.7

- Turn over the main body assembly. [Fig.4.7]
- Pull out the bolt, and remove the base and in manifold. (ALE-5)
- Remove the 4 retainer bolts from the in manifold, and remove the base and in manifold. (ALE-15) [Fig.4.7]

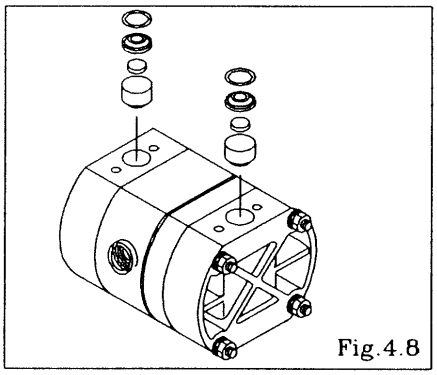
Fig.4.8

- Remove the O ring, valve seat, flat valve and valve stopper. [Fig.4.8]

4.2 Inspection

■Ball valve type

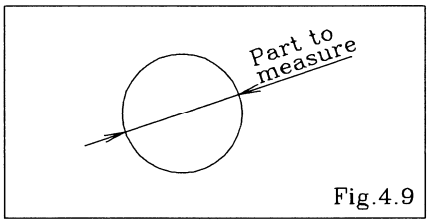

Fig.4.9

▪ Ball [Fig.4.9]
Measure the outside diameter, and if it is outside the usable range, replace the ball.

Usable range of Ball

ALE-15	Sø 20.0 - Sø 22.8 mm

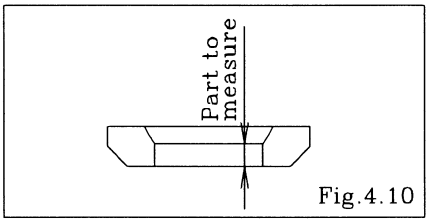

Fig.4.10

▪ Valve seat [Fig.4.10]
Measure the dimension shown at left, and if it is outside the usable range, replace the seat.

Usable range of Valve seat

ALE-15	2.6 - 5.7 mm

■Flat valve type

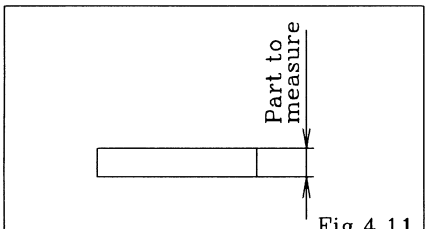

Fig.4.11

▪ Flat valve [Fig.4.11]
Measure the dimension shown at left, and if it is outside the usable range, replace the seat. If the seal ring is worn out or cracked, replace it.

Usable range of Flat valve

ALE-5	2.5 - 3.1 mm
ALE-15	4.3 - 5.0 mm

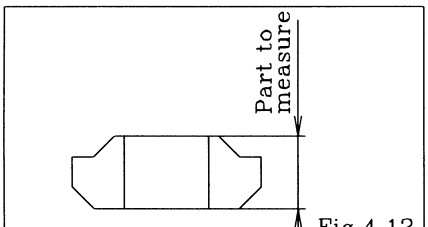

Fig.4.12

▪ Valve seat [Fig.4.12]
Measure the dimension shown at left, and if it is outside the usable range, replace the seat.

Usable range of Valve seat

ALE-5	5.8 - 7.1 mm
ALE-15	8.2 - 10.0 mm

▪ O ring (other than PTFE)
If O rings is worn out or cracked, replace it.

4.3 Installation

For installation, see [Exploded View] on the separate sheet and install in the reverse order of disassembly.

Tightening torque for manifold retainer bolts or nuts

ALE-5	6 N・m
ALE-15	12 N・m

< NOTE >
▪ Make sure there is no dust on the seal surface and the seal is not damaged.
▪ Replace the PTFE O ring regardless of its condition.

5. Diaphragm and Center rod

5.1 Removal

■BAT, BST types

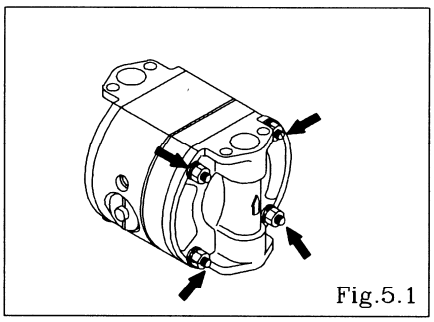
Fig.5.1

- Remove the ball or flat valve and valve seat (see "4.1 Removal BAT, BST types").
- Remove the 12 retainer bolts from the out chamber, and remove the out chamber. [Fig.5.1]

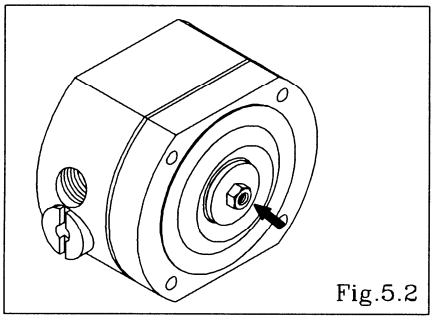
Fig.5.2

- Remove the nuts on both sides of the center rod. [Fig.5.2]
- After the nuts on one side have been removed, remove the center disk and diaphragm. Remove the diaphragm, center disk and center rod from the opposite side of the main body.

<NOTE>

- When the diaphragms are removed, the main body is separated 2 pieces. For easy work, leave the tie rods or bolts fastened temporarily before remove the diaphragms.

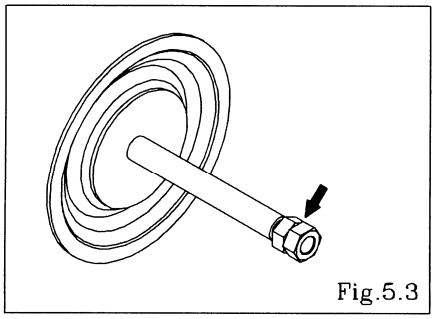
Fig.5.3

- Remove the nuts on the opposite side using the double nuts. [Fig.5.3]
- Remove the coned disk spring, center disk and diaphragm.

■FP□, FVT types

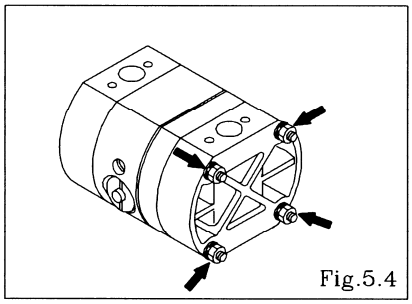
Fig.5.4

- Remove the flat valve and valve seat (see "4.1 Removal FP□, FVT types").
- Remove the 8 (12 on the ALE-15) retainer nuts from the out chamber, and remove the out chamber. [Fig.5.4]

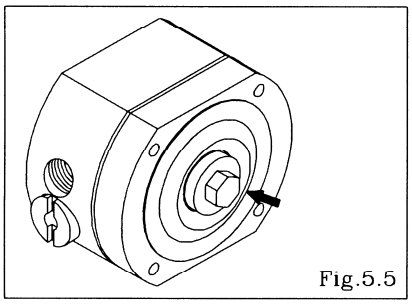
Fig.5.5

- Remove the center disk using the cap and disk remover (special tool: Part No. 771132). (ALE-5FPT) [Fig.5.5]
- Remove the center disk from one side. (ALE-15) [Fig.5.5]
- After the center disk (outside) has been removed, remove the diaphragm and the center disk (inside).
- Remove the center disk and center rod from the opposite side of the main body.

<NOTE>
- When the diaphragms are removed, the main body is separated 2 pieces. For easy work, leave bolts fastened temporarily before remove the diaphragms.

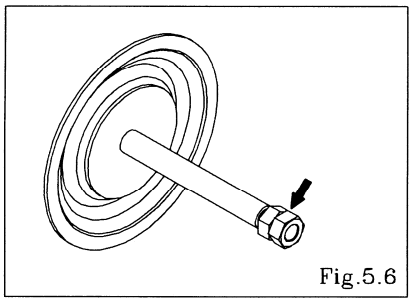
Fig.5.6

- Fix a double nut to one end of the center rod and take the diaphragm and center disk off the opposite end. [Fig.5.6]

- Be careful not to scratch or score the center rod.

.2 Inspection

- Diaphragm
  If the diaphragm is worn out or damaged, replace it.
  Never replace just one diaphragm.

Frequency of inspecting the diaphragms
(Transferring water at room temperature)

ALE-5	PTFE	30,000,000 cycle
ALE-15	PTFE	10,000,000 cycle
	TPEE, TPO	15,000,000 cycle

*The standard in our facility is 'Air supply pressure 0.5 MPa with no discharge pressure.
*It's recommended to conduct an inspection, if 3 months have passed since you start using the pump, or if the number of cycles reaches the above.

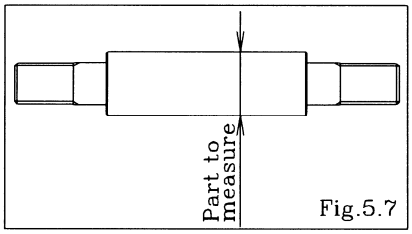

Fig.5.7

- Center rod [Fig.5.7]
  Measure the diameter, and if it is outside the usable range, replace the rod.

Usable range of center rod

ALE-5	ø 9.95 - ø 10.0 mm
ALE-15	ø 13.96 - ø 14.0 mm

5.3 Installation

■FPH, FPS types

For installation, see [Exploded View] on the separate sheet and install in the reverse order of disassembly.

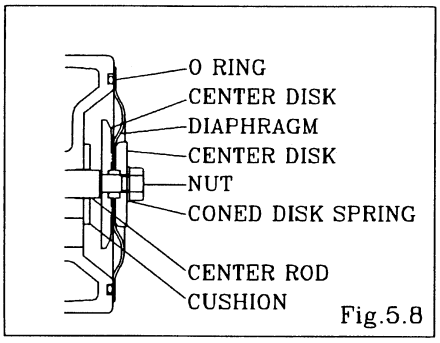

Fig.5.8

- Apply grease to the center rod, and insert it into the main body.
- Keep the convex side of the diaphragm to the outside.
- Tighten the center disk using the open-end wrenches.
- Tighten the out chamber temporarily at first.
- After installation of the out chambers on both sides, place the pump on a flat surface and stand the pump upright for further assembly.

Tightening torque for center rod and out chamber

	Center rod	Out chamber
ALE-15	14 N・m	12 N・m

<NOTE>
- Make sure there is no dust on the seal surface in order to prevent seal damaged.
- Tighten the bolts that balance should be equal from both side on diagonal line with even torque.

■B□T, F□T types

For installation, see [Exploded View] on the separate sheet and install in the reverse order of disassembly.

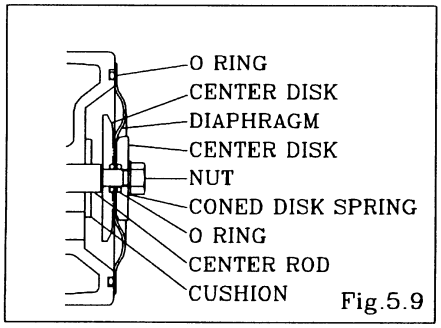

Fig.5.9

- Apply grease to the center rod, and insert it into the main body.
- Keep the convex side of the diaphragm to the outside.
- Put the O rings to both sides of the diaphragm. [Fig.5.9]
- Tighten the cap and disk remover using the Accessory tool (special tool: Part No. 771132) for the ALE-5FPT types.
- Tighten the center disk using the open-end wrenches for the ALE-15FP□, FVT (No coned disk springs and nuts are needed.)
- Draw the center disk to one side, (cf. Fig.5.9) and install the out chamber. Tighten the bolts temporarily.
- Draw the center disk to the opposite side, then turn the diaphragm over (cf. Fig.5.9). And install the out chamber. Tighten the bolts temporarily.
- After installation of the out chambers on both sides, place the pump on a flat surface and stand the pump upright for further assembly.

Tightening torque for center rod and out chamber

	Center rod	Out chamber
ALE-5	7.5 N・m	6 N・m
ALE-15	14 N・m	12 N・m

<NOTE>
- Make sure there is no dust on the seal surface in order to prevent seal damaged.
- Replace the PTFE O ring by new one.
- Tighten the bolts that balance should be equal from both side on diagonal line with even torque.

6. Pilot valve Assembly, Guide and Bushing

6.1 Removal

■ALE-5

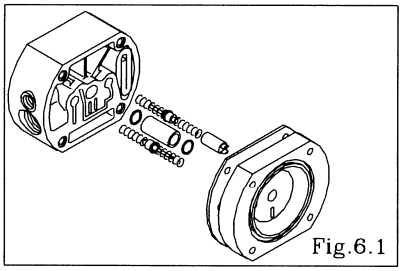
Fig.6.1

- Remove the diaphragm and center rod etc. (see "5.1 Removal").
- Remove the main body. [Fig.6.1]
- Draw out the pilot valve assembly. [Fig.6.1]
- Remove the packing and bushing. [Fig.6.1]

■ALE-15

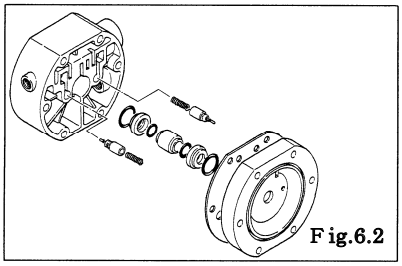
Fig.6.2

- Remove the diaphragm and center rod etc. (see "5.1 Removal").
- Remove the body B. [Fig.6.2]
- Draw out the pilot valve assembly. [Fig.6.2]
- Remove the packing, bushing and guide. [Fig.6.2]

6.2 Inspection

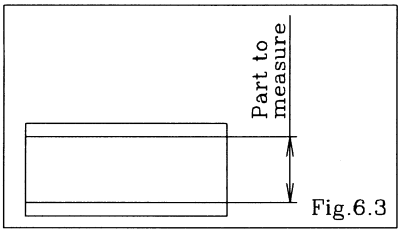

Fig.6.3

- Bushing (ALE-5) [Fig.6.3]
  Measure the inside diameter, and if it is outside the usable range, replace the bushing.

Usable range of bushing
ø 10.1 - ø 10.3 mm

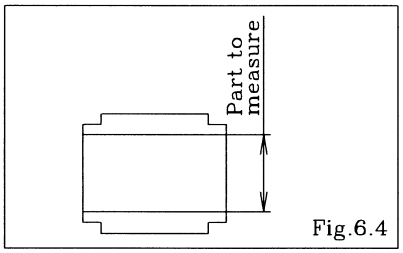

Fig.6.4

- Guide (ALE-15) [Fig.6.4]
  Measure the inside diameter, and if it is outside the usable range, replace the guide.

Usable range of guide
ø 14.1 - ø 14.2 mm

- O ring, Packing
  If the O ring is worn out or cracked, replace it.
- Pilot valve assembly
  If the pilot valve is worn out or cracked, replace it.

6.3 Installation

For installation, see [Exploded View] on the separate sheet and install in the reverse order of disassembly.

The correct direction of the V packing

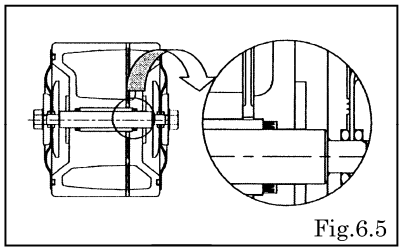
Fig.6.5

<NOTE>
- Make sure there is no dust on the seal surface and the seal is not damaged.
- Apply grease to packing.
- The open side of the V faces toward the diaphragm (air chamber).

7. C spool valve assembly and Sleeve assembly

7.1 Removal

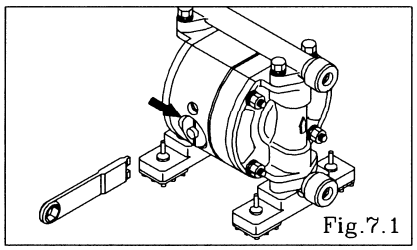
Fig.7.1

- Remove the cap using the cap and disk remover (special tool: Part No. 771132). [Fig.7.1]

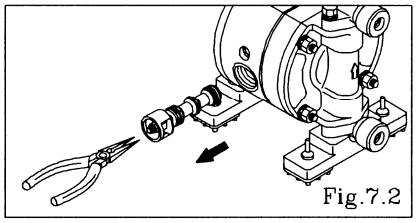
Fig.7.2

- Draw out the C spool valve assembly using the plyer, and remove the seal ring from the C spool valve assembly. [Fig.7.2]

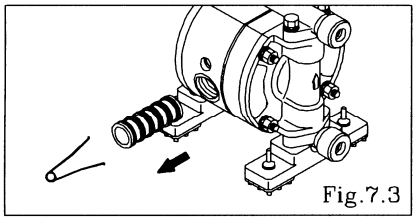
Fig.7.3

- Remove the sleeve using the sleeve remover (special tool: Part number 713148). [Fig.7.3]

7.2 Inspection

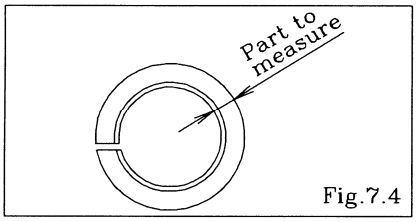

Fig.7.4

- C Spool valve Assembly
  Seal ring [Fig.7.4]
  Measure the inside thick diameter, and if it is outside the usable range, replace the c spool valve assembly.
  If the seal ring is worn out or cracked, replace C spool valve assembly.

Usable range of seal ring

ALE-5	1.40 - 1.48 mm
ALE-15	1.82 - 1.90 mm

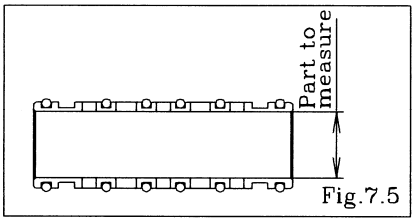

Fig.7.5

- Sleeve Assembly [Fig.7.5]
  Measure the inside diameter, and if it is outside the usable range, replace the sleeve assembly.

Usable range of Sleeve

ALE-5	ø 9.5 - ø 9.55 mm
ALE-15	ø 15.8 - ø 15.85 mm

- O ring
  If the O ring is worn out or cracked, replace it.

<NOTE>

- C Spool Valve Assembly and Sleeve Assembly must be Replaced complete set. Unable to replace individual component.

7.3 Installation

For installation, see [Exploded View] on the separate sheet and install in the reverse order of disassembly.

<NOTE>

- Make sure there is no dust on the seal surface and it is not damaged.

8. Retightening of Tie rods

■Metal type

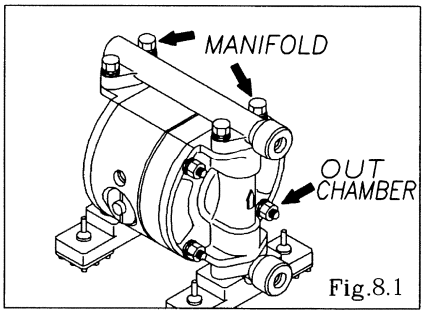

Fig.8.1

- The torque should be applied on the occasion of
  (1) Right before the pump to use.
  (2) There are any leaks of material on daily inspecting a pump.

		Out chamber	Manifold
ALE-15	BAT, BST	12 N・m	

<NOTE>
- Tighten the bolts that balance should be equal from both side on diagonal line with even torque.
- Retighten the Out chamber and then the manifold in this order. [Fig.8.1]

■Plastic type

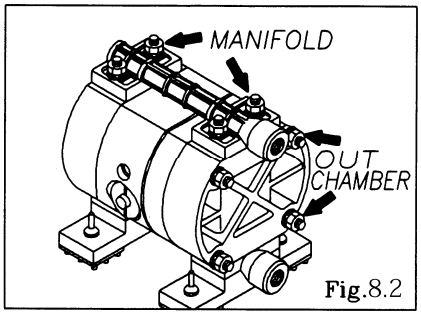

Fig.8.2

- The torque should be applied on the occasion of
  (1) Right before the pump to use.
  (2) There are any leaks of material on daily inspecting a pump.

		Out chamber	Manifold
ALE-5	FPT	6 N・m	
ALE-15	FP□, FVT	12 N・m	

<NOTE>
- Tighten the bolts that balance should be equal from both side on diagonal line with even torque.
- Retighten the Out chamber and then the manifold in this order. [Fig.8.2]

©YAMADA CORPORATION

OWNER'S MANUAL

Air-Operated Double Diaphragm Pumps

ALE-5 Series
ALE-15 Series
ALE-20 Series
ALE-25 Series
ALE-40 Series
ALE-50 Series
ALE-80 Series

February 2025

! READ INSTRUCTIONS BEFORE OPERATING

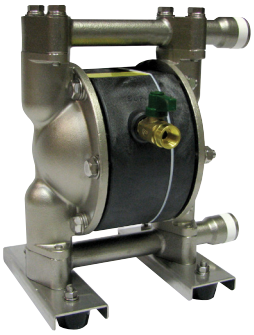

ALE-15BST

ALE-15FPH

ALE-15FVT

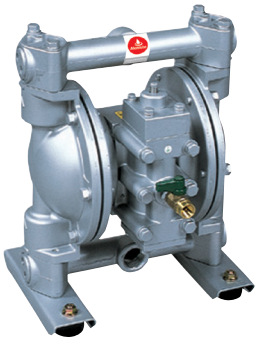

ALE-20BAH

ALE-20BST

ALE-25BAH

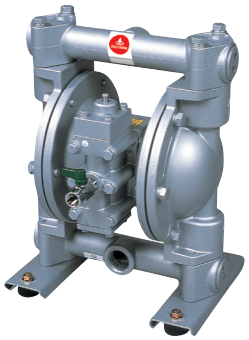

ALE-25BST

ALE-40BAH

ALE-50BAH

ALE-50BPS

ALE-50BPT

ALE-80BAH

·Introduction

This product is a positive-displacement pump that transfers fluids by movement of diaphragms driven by compressed air through a unique switching mechanism. The casing that comes in contact with the fluid is made of aluminum, stainless steel, polypropylene, polyvinylidene fluoride depending on the model you have selected according to the type of fluid to be pumped. The diaphragms are made of plastic-based materials.

·For safe operation

This document contains information vital for safe and efficient operation of this product. Before using the pump, be sure to read this document carefully, particularly the "warnings and cautions", and be fully familiar with the operating procedures. Be sure to keep this document handy for future reference.

·Warnings and cautions

For safe use of this product, be sure to NOTE the following: In this document, warnings and cautions are indicated by symbols. These symbols are for those who will operate this product and for those who will be nearby, for safe operation and for prevention of personal injury and property damage.
The following warning and caution symbols have the meanings described below. Be sure to remember their meanings.

⚠ WARNING: If you ignore the warning described and operate the product in an improper manner, there is danger of serious bodily injury or death.

⚠ CAUTION: If you ignore the caution described and operate the product in an improper manner, there is danger of personal injury or property damage.

Furthermore, to indicate the type of danger and damage, the following symbols are also used along with those mentioned above:

This symbol indicates a DON'T, and will be accompanied by an explanation on something you must not do.

This symbol indicates a DO, and will be accompanied by instructions on something you must do in a certain situation.

·Operating caution

Before using this product

⚠ WARNING

- Plastic casing models cannot be connected with ground wire. Do NOT use with flammable liquid and atmosphere.

- When using compressed gas (hereinafter called "compressed air") to drive this pump, be sure it is one of the following:
  * Compressed air supplied from an air compressor
  * Nitrogen (N_2) gas
  Use of compressed air other than the above may cause air pollution, damage to the pump, or even an explosion.

- Pressure Ratings are dependent on pump material and liquid temperature variations. Please see "Temperature Pressure Curve" in the [10.1 Main specification] and check for the allowable working pressure at the specific temperature of the liquid being pumped.
  Air pressure and discharge pressure must not exceed the allowable working pressure.
  If air pressure and discharge pressure exceed the allowable working pressure, it may cause liquid leaks, damaged pump casings or diaphragms and could cause a fatal accident.

- When moving this product, make sure that the internal pressure is released. If the pump is moved while under pressure, any shock imparted by droppage, etc. may damage the pump or even cause an explosion.

- Hazardous fluids (with strong acid or alkali, flammable or toxic) or gas bubbles generated by such fluids may cause serious injury or even death if accidentally inhaled or consumed or if they come into contact with the eyes or adhere to skin. Therefore, the following precautions are strongly advised.
  *Be fully familiar with the properties of the fluid to be pumped and work in strict accordance with the operating instructions provided by the suppliers of such fluids (such as wearing goggles, gloves, mask or work clothes).
  *When storing a hazardous fluid, strictly comply with the regulatory procedures (such as using proper containers, storage conditions, etc.).
  *Always install the piping and exhaust port of this pump away from human and animal traffic.

⚠ WARNING

- When a diaphragm is damaged, fluid will gush out together with air through the exhaust port. Also when pump has positive suction head, liquid will be forced out from exhaust port due to positive inlet pressure. Make sure to provide protective measures in consideration of possible leakage of fluid (see NOTE: Arranging outside exhaust on P.10). For example using a hose and pit etc., also be sure you are using a model with appropriate corrosion resistance for the fluid to be pumped.

- When installing this product, be sure to connect a ground wire from the specified position of this product. When this product is installed and operated without the ground wire properly connected, friction between parts, as well as abrasion caused by the flow of some fluids inside the casing, may generate static electricity. Also, depending on the type of fluid being pumped and the installation environment (such as gases in the air and type of surrounding fixtures), static electricity could become a cause of fire or electric shock.

- Improper grounding, poor ventilation, or unshielded fire or spark can create a danger of fire or explosion. Therefore, the following precautions are strongly advised.
  *All peripheral equipment and piping connected to this product should be properly grounded.
  *To pump flammable liquids, use a model with an aluminum or stainless-steel casing.
  *Whenever you notice any spark while operating this product, immediately stop its operation, and do NOT start using it again unless you are sure of the cause and corrective actions have been taken.
  *Depending upon the type of fluid being pumped, bubbles of flammable gas may be generated. Make sure that ventilation is satisfactory.
  *This product itself, its piping and exhaust ports should be kept away from unshielded fire, spark and other causes of ignition. If a diaphragm is damaged, fluid will gush out together with air from the exhaust port.
  *Do NOT leave gasoline or solvent etc. that contains waste at the work site.
  *Machinery and other equipment near the place of installation of this product should be properly insulated to prevent conduction with each other.
  *Do NOT operate heating devices that create flames or have heating filaments anywhere near the pump or its piping.
  *If there are flammable gases in the air while the pump is operating, do NOT switch electric appliance on and off.
  *Do NOT operate a gasoline engine at the work site.
  *Restrict smoking at the work site.

- After you shut down the pump and disconnect the piping, some fluid may remain inside the pump. Also, if the pump is left unused for a prolonged period, some fluid may remain inside the pump and connected piping. Therefore, be sure to purge the system of fluid and clean the pump before prolonged disuse. If the product is left unused for a prolonged period with fluid remaining in the connected piping as well as the pump itself, the fluid may expand, depending on the ambient temperature (because of freezing or heat), which may cause damage to the pump and/or piping and possible leakage of fluid.

- Always use genuine parts for ALE series when replacing component parts of this product. Do NOT attempt to modify the components parts or replace them with other than genuine parts for ALE series.

- Torque of all tightening parts must be inspected before operation. Designated torque are mentioned in maintenance manual.

⚠ WARNING

- When pumping a hazardous fluid (hot, flammable, strong acid, etc.) with this product, provide protective measures (install a pit, a protection box, sensors, etc.) in consideration of possible leakage of fluid, and post warning signs at necessary places.
  Make the warning symbols in [12.Warning symbols], and attach them to the casing and piping, etc.
  Leakage of fluid may cause fire, air pollution or a serious accident.
  When pumping a hot fluid, the casing and piping will become hot, which may burn the skin when touched.

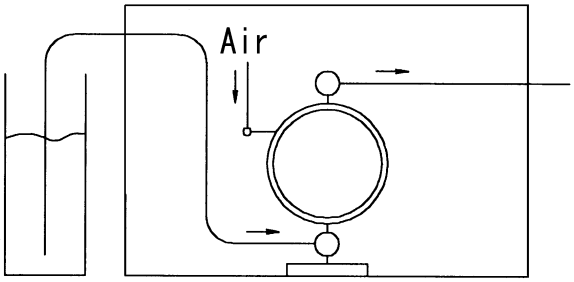

Fig.0.1

- Before using this product, be sure you are familiar with the precautions regarding the fluid to be pumped, and verify the corrosion resistance of the parts that will come into contact with the fluid. NEVER use the product with any fluid against which it does not have sufficient corrosion resistance or with a fluid that poses a risk of explosion. If you are unsure of the corrosion resistance, contact your dealer or our regional office. If you use this product with any fluid against which the parts that will come in contact with the fluid do not have sufficient corrosion resistance, it may result in damaging the product or leakage of fluid.
- When working in the vicinity of pumping of fluid with this product, be sure to wear protective gear (goggles, mask, etc.).
- When using this product, observe the relevant regulatory rules concerning fire prevention, labor safety standards, etc.
- If you have any questions on the operation of this product (method of connection or installation), contact your dealer or our regional office.

⚠ CAUTION

- When operating this product, it may generate loud operating noise, depending upon the condition of use (fluid pumped, supply air pressure and discharge pressure). If regulatory rules apply, provide appropriate acoustic measures where necessary. (For the noise value of this product, see [10.1 Main specifications].)
- To drive this product, use supply air with minimum moisture content.
- If a diaphragm of this product is damaged, supply air may mix with the fluid or the fluid may flow into the main body (air-switching portion). If air supply is inadequate or contaminated, do NOT operate the pump.
- While operating this product, do NOT cover the intake port by hand.
- If the pump remains unused for a long period of time, or you have misgivings about running the pump, please consult with the dealer where you purchased it or our Sales office.

Table of contents

·Introduction ····· 1
·For safe operation ····· 1
·Warnings and cautions ····· 2
·Operating caution ····· 2
·Table of contents ····· 5

1. Names of parts and materials
1.1 ALE-5 series ····· 6
1.2 ALE-15 series ····· 7
1.3 ALE-20, 25 series ····· 8
1.4 ALE-40 series ····· 9
1.5 ALE-50 series ····· 10
1.6 ALE-80 series ····· 11
2. Assembly
2.1 Installation of accessories ····· 12
3. Installation
3.1 Method of transport ····· 13
3.2 Installing the pump ····· 13
3.3 Connecting the ground wire ····· 15
4. Connection
4.1 Connecting fluid piping ····· 16
4.2 Connecting air piping ····· 17
5. Operation
5.1 Method of operation ····· 18
5.2 Flow adjustment ····· 18
5.3 Shutdown ····· 19
5.4 Releasing the pressure ····· 19
6. Method of cleaning ····· 20
7. Daily check ····· 21
8. Troubleshooting
8.1 Pump does not run ····· 21
8.2 Pump runs, but fluid does not come out ····· 21
8.3 Flow (discharge volume) decreased ····· 21
8.4 Liquid leaks from exhaust port (silencer) ····· 22
8.5 High air consumption during in operation ····· 22
8.6 Irregular noise ····· 22
8.7 Irregular vibration ····· 22
9. Returning the product for servicing
9.1 Before returning the product ····· 22
10. Main body specifications
10.1 Main specifications ····· 23
10.2 Appearance and dimensions ····· 27
10.3 Performance curve ····· 34
11. Warning symbols ····· 39

1. Names of parts and materials

1.1 ALE-5 series

A: Air Valve
B: Reset Button
C: Out Manifold
D: Out Chamber
E: In Manifold
F: Pump Base
G: Discharge Port
H: Intake Port
I: Lift Point

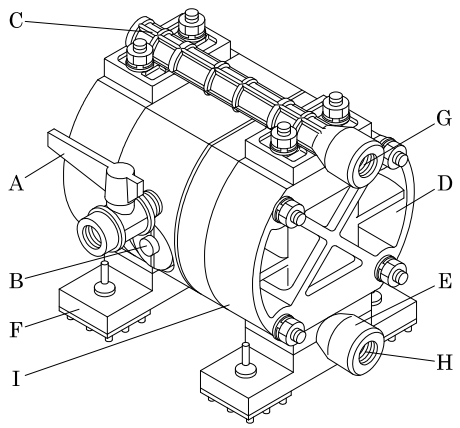

ALE-5FPT

• Polypropylene type

Type	ALE-5FPT
Switching Portion	PPS
Fluid contact Portion	PPG
Diaphragm	PTFE
Flat Valve	PTFE
O Ring	PTFE
Valve Seat	PPG
Center Disk	PPG(SUS304)

■List of accessories

- Operation Manual ·····1
- Maintenance Manual ·····1
- Parts exploded view ·····1
- Parts list ·····1
- Air Valve ·····1

1.2 ALE-15 series

A: Air Valve
B: Reset Button
C: Out Chamber
D: Pump Base
E: Discharge Port
F: Intake Port
G: Lift Point
H: Ground Connection Point
I: Out Manifold
J: In Manifold

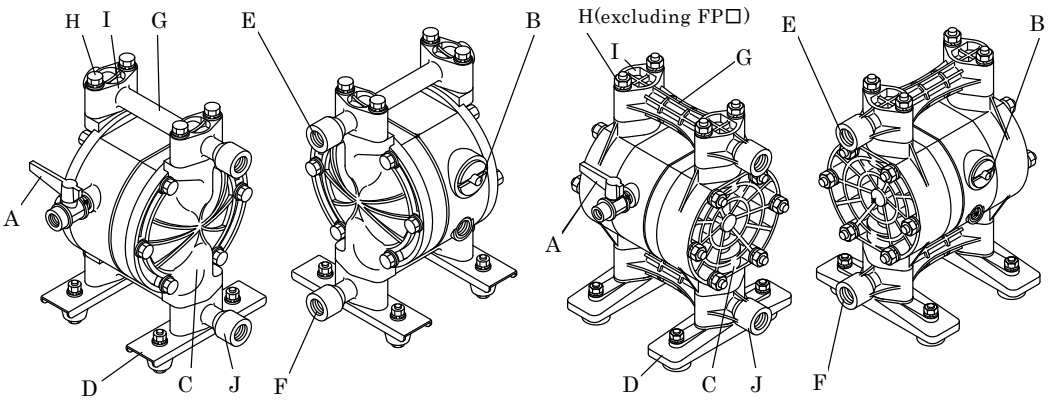

ALE-15BAT
ALE-15BST

ALE-15FP□
ALE-15FVT

・Aluminum type

Type	ALE-15BAT
Switching Portion	PPS
Fluid contact Portion	ADC12
Diaphragm	PTFE
Ball/O Ring	PTFE
Valve Seat	A5056
Center Disk	A5056

・Stainless-steel type

Type	ALE-15BST
Switching Portion	PPS
Fluid contact Portion	SCS14
Diaphragm	PTFE
Ball/O Ring	PTFE
Valve Seat	SUS316
Center Disk	SUS316

・Polypropylene type ([ ]: Polyvinylidene fluoride type)

Type	ALE-15FPT [ALE-15FVT]	ALE-15FPH	ALE-15FPS
Switching Portion	PPS		
Fluid contact Portion	PPG [PVDF]		
Diaphragm	PTFE	TPEE	TPO
Flat Valve/Ball	PTFE	PTFE/TPEE	PTFE/TPO
O Ring	PTFE	NBR	EPDM
Valve Seat	PPG [PVDF]		
Center Disk	PPG(SUS304) [PVDF(SUS304)]		

*Only PTFE diaphragm is setup in polyvinylidene fluoride type.

■List of accessories

・Operation Manual ·····1
・Maintenance Manual ·····1
・Parts exploded view ·····1
・Parts list ·····1
・Air Valve ·····1

1.3 ALE-20, 25 series

A: Air Valve
B: Reset Button
C: Out Manifold
D: Out Chamber
E: In Manifold
F: Pump Base
G: Discharge Port
H: Intake Port
I: Lift Point
J: Ground Connection Point

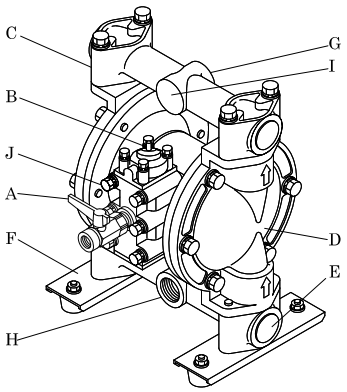

ALE-20BA□
ALE-25BA□

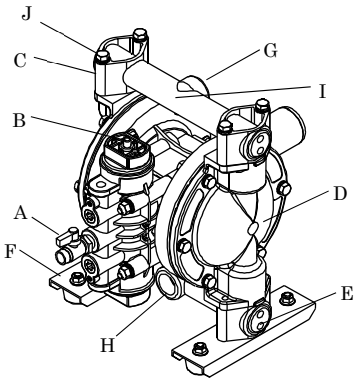

ALE-20BST
ALE-25BST

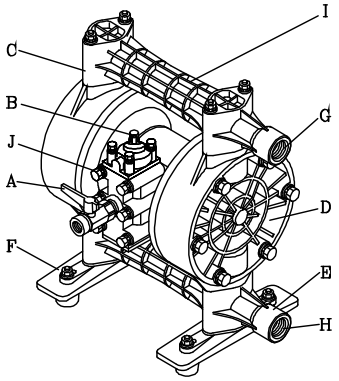

ALE-20BP□
ALE-25BP□
ALE-25BVT

・Aluminum type

Type	ALE-20BAT ALE-25 BAT	ALE-20BAH ALE-25BAH
Switching Portion	ADC12	
Fluid contact Portion	ADC12	
Diaphragm	PTFE	TPEE
Ball/O Ring	PTFE	TPEE/NBR
Valve Seat	SMS1025	
Center Disk	A5056	SUS316

・Stainless-steel type

Type	ALE-20BST ALE-25 BST
Switching Portion	PPG
Fluid contact Portion	SCS14
Diaphragm	PTFE
Ball/O Ring	PTFE
Valve Seat	SUS316
Center Disk	SUS316

・Polypropylene type ([ ]: Polyvinylidene fluoride type)

Type	ALE-20BPT ALE-25 BPT [ALE-25BVT]	ALE-20BPS ALE-25 BPS
Switching Portion	ADC12	
Fluid contact Portion	PPG[PVDF]	
Diaphragm	PTFE	TPO
Ball/O Ring	PTFE	TPO/EPDM
Valve Seat	PPG[PVDF]	
Center Disk	PPG(SCS13) [PVDF(SCS13)] *1	

*1. SCS 13 is an insert material.

■List of accessories

・Operation Manual ·····1
・Maintenance Manual ·····1
・Parts exploded view ·····1
・Parts list ·····1
・Air Valve ·····1
・Silencer ·····1
・Accessory Tool ·····2 (only BP□, PVT type)
・Bolt ·····4
・Nut ·····4
・Cushion ·····4

1.4 ALE-40 series

A: Air Valve
B: Reset Button
C: Out Manifold
D: Out Chamber
E: In Manifold
F: Pump Base
G: Discharge Port
H: Intake Port
I: Lift Point
J: Ground Connection Point

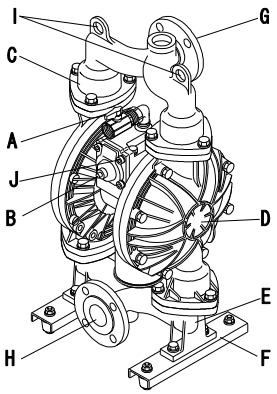

ALE-40BA□

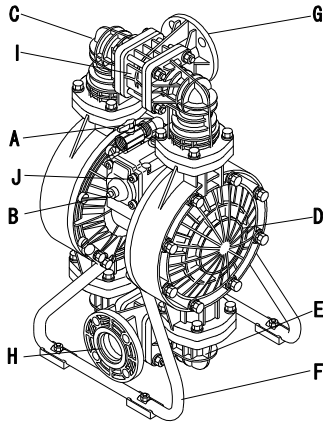

ALE-40BPS

・Aluminum type

Type	ALE-40BAT	ALE-40BAH
Switching Portion	ADC12	
Fluid contact Portion	ADC12, AC4C-T6	
Diaphragm	PTFE	TPEE
Ball/O Ring	PTFE	TPEE/NBR
Valve Seat	A5056	TPEE
Center Disk	A5056	

・Polypropylene type

Type	ALE-40BPS
Switching Portion	ADC12
Fluid contact Portion	PPG
Diaphragm	TPO
Ball/O Ring	TPO/EPDM
Valve Seat	PP
Center Disk	PPG(SCS13) *1

*1. SCS 13 is an insert material.

■List of accessories

・Operation Manual ····· 1
・Maintenance Manual ····· 1
・Parts exploded view ····· 1
・Parts list ····· 1
・Cushion ····· 4 (excluding BPS type)
・Bolt, Nut ····· 4 (for securing the pump with the cushions, excluding BPS type)
・Air Valve ····· 1
・Bushing ····· 1

1.5 ALE-50 series

A: Air Valve
B: Reset Button
C: Out Manifold
D: Out Chamber
E: In Manifold
F: Pump Base
G: Discharge Port
H: Intake Port
I: Lift Point
J: Ground Connection Point

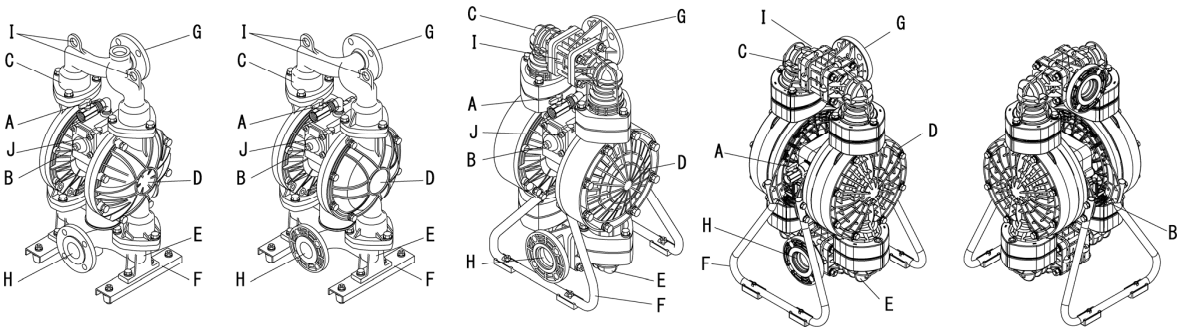

ALE-50BAH ALE-50BST ALE-50BPT ALE-P50BPT
ALE-P50BVT

・Aluminum type

Type	ALE-50BAH
Switching Portion	ADC12
Fluid contact Portion	ADC12, AC4C-T6
Diaphragm	TPEE
Ball/O Ring	TPEE/NBR
Valve Seat	TPEE
Center Disk	A5056

・Stainless-steel type

Type	ALE-50BST
Switching Portion	ADC12
Fluid contact Portion	SCS14
Diaphragm	PTFE
Ball/O Ring	PTFE
Valve Seat	SUS316
Center Disk	SUS316

・Polypropylene type ([ ]: Polyvinylidene fluoride type)

Type	ALE-50BPT	ALE-P50BPT [ALE-P50BVT]
Switching Portion	ADC12	PPG
Fluid contact Portion	PPG[PVDF]	
Diaphragm	PTFE	
Ball/O Ring	PTFE	
Valve Seat	PP[PTFE]	
Center Disk	PPG(SCS13)[PVDF(SCS13)] *1	

*1. SCS 13 is an insert material.

■List of accessories

・Operation Manual ·····1
・Maintenance Manual ·····1
・Parts exploded view ·····1
・Parts list ·····1
・Cushion ·····4 (excluding BPT, BVT type)
・Bolt, Nut ·····4 (for securing the pump with the cushions, excluding BPT, BVT type)
・Air Valve ·····1

1.6 ALE-80 series

A: Air Valve
B: Reset Button
C: Out Manifold
D: Out Chamber
E: In Manifold
F: Pump Base(Stand)
G: Discharge Port
H: Intake Port
I: Lift Point
J: Ground Connection Point

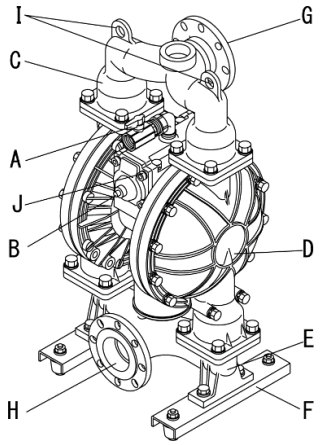

ALE-80BA□

・Aluminum type

Type	ALE-80BAT	ALE-80BAH
Switching Portion	ADC12	
Fluid contact Portion	ADC12, AC4C-T6	
Diaphragm	PTFE	TPEE
Ball/O Ring	PTFE	TPEE/NBR
Valve Seat	A5056	TPEE
Center Disk	A5056	

■List of accessories

・Operation Manual ·····1
・Maintenance Manual ·····1
・Parts exploded view ·····1
・Parts list ·····1
・Air Valve ·····1
・Cushion ·····4
・Bolt, Nut ·····4 (for securing the pump with the cushions)
・Air Valve ·····1

2. Assembly

2.1 Installation of accessories

1) First, open the product package and make sure that all the accessories are in order (see [1. Names of parts and materials] ■List of accessories).
2) Attach the air valve and the silencer (see the appearance drawings on [1. Names of parts and materials]).
(With some models, these are already installed.)

⚠ CAUTION

- All of the connection parts are capped or taped for shipment. Remove the caps and tapes.
- When installing accessories, make sure that no foreign matter falls into the product, as it could cause malfunction of the switching portion.
- Cover an air valve, a silencer with sealing tape to prevent leakage.
- See [10.1 Main specifications]. Remember that the pump is heavy, so extreme care must be taken when lifting it.

According to the point of a figure, please tighten each accessories with tools.
Coil the seal tape around the thread part of the air valve and the silencer, and prevent leak.
As for NDP-40, 50 and 80 series pumps, the silencer is factory installed.

ALE-20BA□、ALE-20BP□、ALE-25BA□
ALE-25BP□、ALE-25BVT、ALE-40BA□
ALE-50BAH、ALE-50BST、ALE-80BA□

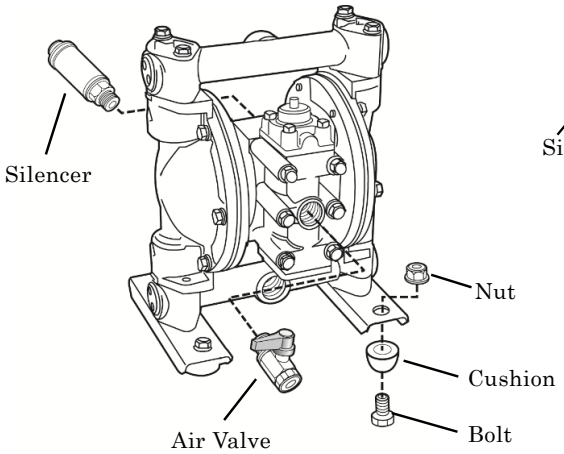

ALE-20BST
ALE-25BST

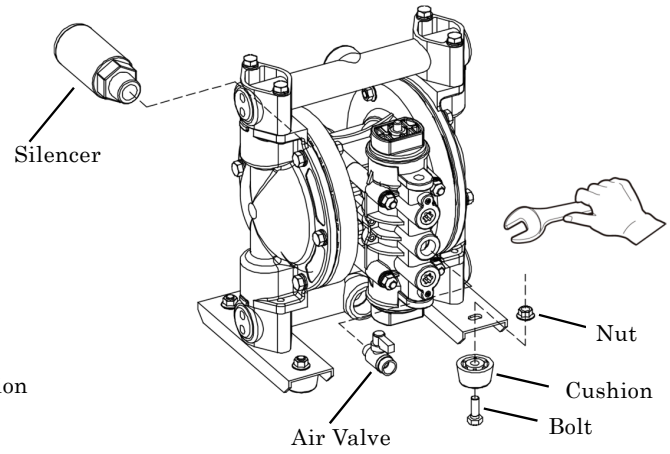

3. Installation

3.1 Method of transport

- When lifting the pump using a chain hoist or crane before transporting it, be sure to lift it by the specified lift point (see [1. Names of parts and materials]).

⚠ WARNING

- Be careful that nobody will pass under the pump when you lift it. It would be very dangerous if the pump should fall.

⚠ CAUTION

- See [10.1 Main specifications]. Remember that the pump is heavy, so extreme care must be taken when lifting it.
- When moving the pump with a forklift or truck, make sure that the pump will not fall. If it does, it may be damaged and/or cause bodily injury.
- NEVER try to move the pump by pulling the hose connected to the pump. The hose or the pump may be damaged.

3.2 Installing the pump

1) Decide where the pump should be installed and secure a suitable space (see Fig. 3.1 A to D).

<NOTE>

- It should be installed horizontally.
- Try to keep the suction lift as short as possible.
  To protect diaphragm from abnormal breakage, inlet pressure must be kept below the following values:
  *PTFE diaphragm :0.02 MPa (height 2 m) During operation
  :0.05 MPa (height 5 m) Not in operation
  *Other diaphragms: 0.1 MPa (height 10 m)
  (Condition with fresh water under ambient temperature)
- Remember to provide sufficient space around the pump for maintenance.
- The direction of the fluid intake port and the discharge port can be switched opposite from each other.
  (For switching, see the maintenance manual.)
- In the event diaphragm failure the exhaust from pump may contain some sludge.
  When operating the pump where it would have an impact on the environment, the exhaust should be directed to a place where there will be no environmental impact.

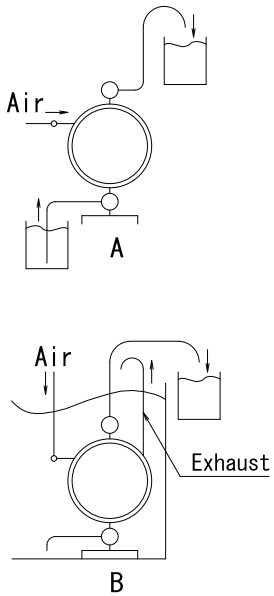

2) Remove the pump from the package and install it in the designated location.
3) When fixing the pump in place, use the cushions on the pump base, and secure the pump by tightening the tied-down bolts a little at a time.

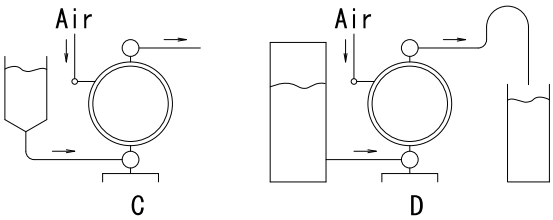

Fig.3.1

⚠ CAUTION

- Even if you do not use the cushions to secure the pump in place, mount it in such a way that vibration generated by pump operation will be absorbed.
- If the pump will be submerged during operation, follow the steps below:
  *Verify the corrosion resistance of each component of the pump, and do NOT expose the pump to any fluid for which it does not have proper corrosion resistance.
  *Exhaust should directed outside, not into the fluid in which the pump is submerged. For information on how to arrange the exhaust, see NOTE: Arranging outside exhaust and Fig.3.2 below.
  *Make sure that you can reach all of the valves without submerging your hand.
- When operating the pump, operation noise may be generated, depending upon conditions of use (kind of fluid being pumped, supply air pressure and discharge pressure).
  If any regulatory rules apply, provide appropriate acoustic measures. (For the noise level of this product, see [10.1 Main specifications].)
- When pumping a hazardous fluid (hot, flammable, strong acid, etc.), provide protective measures (installation of a pit or sensors, etc.) in consideration of possible leakage of fluid, and post warning signs at necessary places. For details, see the applicable operating caution on P.2 and P.4.

⚠ WARNING

- If using the pump with a flammable fluid or in a flammable environment, read the applicable operating caution on P.3.

<NOTE> Arranging outside exhaust

- Remove the silencer.
- Connect a hose with a ground wire to the pump's exhaust port, and attach the silencer to the tip of the hose. Use a hose of the same diameter as the exhaust port. (If the hose is longer than 5 meters, consult your dealer or our regional office.)
- Have a pit, a protection box, etc. at the end of the hose.

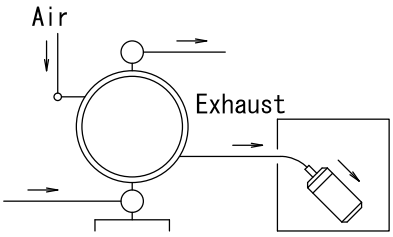

Fig.3.2

⚠ WARNING

- Be sure to have a pit, a protection box, etc. at the end of the hose in preparation for the flow of fluid in case of damage to a diaphragm. For details, see the applicable operating caution on P.2.
- Pump exhaust should be directed to a safe place, away from people, animals and food.

<NOTE> Solenoid Operation

When air line operation is to be controlled by a solenoid valve, a three way type is recommended.
A three-way solenoid valve allows any trapped air to bleed off, in turn improving pump performance.

3.3 Connecting the ground wire

a) When installing the pump, be sure to connect the ground wire at the specified position. For the specified position for connecting the ground wire, see [1. Names of parts and materials]. (excluding ALE-5FP, ALE-15FP□, ALE-P50BPT and ALE-P50BVT).

b) Also connect ground wires to peripheral equipment and piping.

c) Use 2.0mm² minimum ground wire.

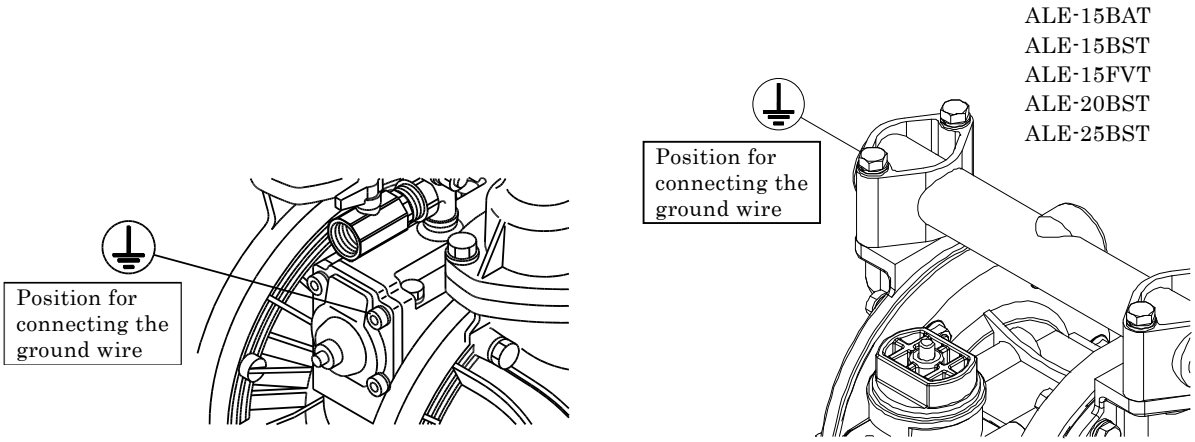

Fig.3.3

⚠ WARNING

- Be sure to connect ground wires to the connected piping and any other connected equipment. For details, see the applicable operating caution on P.3.
  When the pump is operated without a ground wire or otherwise not properly grounded, friction between parts and abrasion caused by some fluids flowing inside the casing may generate static electricity. Also, depending on the type of fluid being pumped and the installation environment (such as gases in the air or the surrounding fixtures), it may be a cause of fire or electric shock.

4. Connection

4.1 Connecting fluid piping

1) Connect a flow valve and a drain valve to the fluid discharge port of the pump.
2) Connect a valve for maintenance to the fluid suction intake port of the pump.
3) Connect a hose to the valve on the suction-port side and the valve of the discharge-port side of the pump.
4) Connect a hose on the suction-side intake and the discharge-port side to the respective vessels.

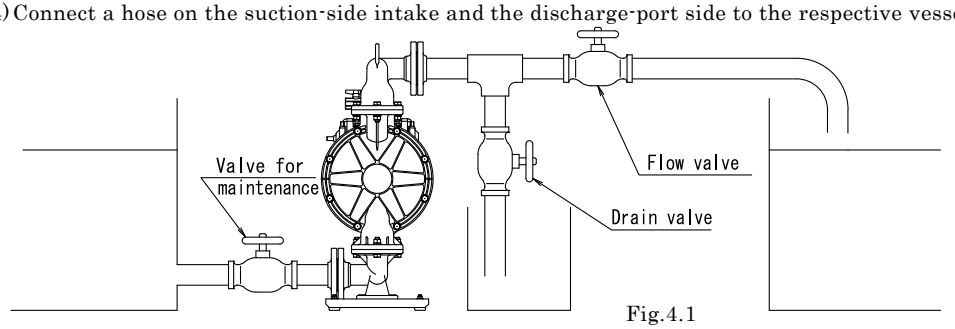

Fig.4.1

⚠ CAUTION

- Use a flexible hose to absorb pump vibration, and ground the hose.
- Make sure that there will be no external force on any connection part of the pump. Be especially careful not to have the pump support part of the weight of the hose and the piping.
- Use a sturdy hose that will not collapse under the strong suction of the pump. Also, make sure the hose is of more than sufficient pressure rating.
- Use a hose of a diameter the same as or larger than the pump's ports. If you use a hose of smaller diameter, the pump's performance will be adversely affected, and it may even malfunction.
- When pumping a fluid that contains slurry, verify that the particle size is below the slurry limitation (see [10.1 Main specifications]). If it exceeds the limitation of slurries indicated in the main specifications, attach a strainer to the pump to stop larger particles. Otherwise, such particles may cause a malfunction.
- If, depending upon the place of pump installation, the volume of the pumped fluid changes drastically, install a relief valve on the discharge side, and bring the pressure down below the maximum permissible value. If, owing to a change in the volume of fluid, the pressure inside the pump exceeds the maximum permissible pressure, it may cause damage.
- Keep a vessel below the relief valve to catch any drain off.

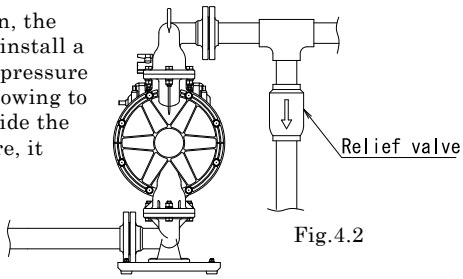

Fig.4.2

- When testing piping for leakage, do NOT apply pressure to the pump's inlet and outlet sides with compressed air from outside. It may cause abnormal breakage to the diaphragm or the switching portion. When testing the piping, either install a valve between the pump's suction inlet and the discharge outlet and piping, or disconnect the pump from the piping and install plugs so that there will be no pressure from outside.
- In our product inspection, clean water is used. To prevent mixture of dirty water into the fluid to be pumped, clean the inside of the pump before finishing installation work.
- When installing a standby pump or two pumps in parallel from, be sure to provide a valve on each of the IN and OUT sides and perform pump switching by using the liquid material valve. If the valve of the stop-side pump is open, the diaphragm will be inverted by the discharge pressure of the operating-side pump, resulting in damage in an early stage.

4.2 Connecting air piping

⚠ WARNING

- Before starting work, make sure that the air compressor is shut off.

1) Connect an air valve, air filter, regulator and if necessary lubricator (hereinafter called the "peripheral equipment") to hose which connected to compressor.
   Install air valve on the air inlet of the pump. See <NOTE> for the details.
2) Install these peripheral items supported by brackets, etc., near the pump.
3) Connect the hose from the peripheral equipment to the air valve of the pump's supply port.

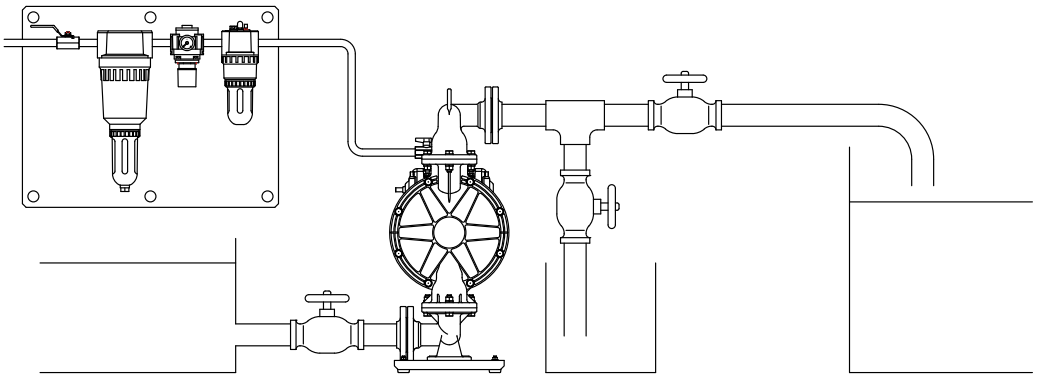

Fig.4.3

⚠ CAUTION

- Use a flexible hose to absorb pump vibration, and ground the hose.
- Make sure that there will be no external force on any connection part of the pump. Be especially careful not to have the pump support part of the weight of the hose and the piping.
- The piping and the peripheral equipment may become clogged with sludge. Clean the inside of the piping for 10 to 20 seconds before connecting it to the pump.
- Be sure to sufficiently ground the piping and peripheral equipment.

<NOTE>

- Air piping size should be equal to the inlet port of the pump to supply enough air to run the pump. The air compressor should be able to provide adequate air flow to the pump. Attach the compressor as close as possible to the pump, considering operability and stability of air pressure.
- If you use a solenoid valve as the air valve, be sure it is a three-way valve. When the valve is closed, the internal compressed air of the pump will be released, and this will switch the spool to its normal position.
- Use of a coupler for the connection part of each hose will make operation and maintenance easier.
- If you use the pump intermittently the pump will not require lubrication. However lubrication is recommended if running the pump continuously for long periods or using very dry air or at high temperatures. This will guarantee the life of the pumps seals.

  *High temperature operation: When transferring liquid whose temperature exceeds 70 °C

  *Continuous operation: When the pump operates continuously for longer than 1 hour and is stopped for less than 15 minutes.

  *Lubrication: Use only turbine oil Class 1 grade oil (equivalent to ISO VG 32), under the following conditions; Oil concentration at 50 mg/m³, Absolute pressure at 0.1 MPa. Maximum temperature of 20 °C and Humidity at 65 %.

5. Operation

5.1 Method of operation

⚠ CAUTION

- Before starting the pump, make sure that all piping is properly connected.
- Also, before starting the pump, make sure that all the bolts are securely tightened. (Refer to the maintenance manual for the bolts that a regulation torque are explained.)
- Make sure that the air valve, regulator and the drain valve on the discharge side are closed. Also, make sure that the valve on the suction side is opened.

1) Start the air compressor.
2) Open the air valve in front of each piece of peripheral equipment, and adjust the supply air pressure with a regulator to within the permissible range (see [10.1 Main specifications]).
3) Open the flow valve on the discharge side.
4) Press the RESET button, and then slowly open the air valve of the pump.
5) First, verify that fluid is flowing inside the piping and is being pumped to the discharge side, and then fully open the air valve.
6) Again adjust the supply air pressure with a regulator to within the permissible range (see [10.1 Main specifications]).

⚠ CAUTION

- Do NOT open the air valve suddenly.
- In case of use lubricator, must be used turbine oil none addition class 1 turbine oil (equivalent ISO VG32 grade) for lubricants. Do not apply lubricants more than required and also do not use any other lubricants, which designated on this instruction manual. This may cause of pump problem and there is danger of serious bodily damage.

5.2 Flow adjustment

- Adjust the flow valve on the discharge side. For the relationship among the flow, supply air pressure and discharge pressure, see [10.3 Performance curve].

⚠ CAUTION

- As you start closing the flow valve, the supply air pressure may rise. Make sure that the pressure is kept within the normal operating range (see [10.1 Main specifications]).
- Depending upon the viscosity and specific gravity of the fluid, the suction stroke and other conditions, the permissible suction flow speed of fluid into the pump will vary; however, if the pump speed (flow speed of fluid) increases greatly, cavitation will occur, and this not only will reduce pump performance, but it may cause a malfunction. Adjust the supply air pressure as well as the flow in order to prevent cavitation.
- If fluid is not discharged after you start the pump, or if you hear an abnormal noise or notice any irregularity, shut down the pump immediately (see [8. Troubleshooting]).

5.3 Shutdown

- Close the air valve of the pump and shut off the supply air.

⚠ CAUTION

- There is no problem in shutting down the pump with the flow valve closed while air is being supplied; however, if this condition continues for many hours while there is nobody watching the pump, it may continue running when there is a leak from the pump or piping, and fluid may continue flowing out of the position of leakage. Upon finishing your work, release the internal pressure from the pump and close the air valve (see [5.4 Releasing the pressure]).
- When the pump is shut down while pumping slurry, particulate matter contained in the slurry will be deposited and get stuck inside the out chamber. If the pump is started again as-is, the diaphragm may be damaged or the center disk may be overloaded, and this may cause damage such as bending of the center rod. After finishing your work, purge the remaining fluid from the pump (see [6. Method of cleaning]).

5.4 Releasing the pressure

1) Make sure that the air valve of the pump is closed.
2) Shut down the air compressor or close the valve on the air-supply side of the peripheral equipment.
3) Close the flow valve on the discharge side, start slowly opening the drain valve, and discharge the fluid under pressure.
4) Open the air valve of the pump, start running the pump, and discharge the remaining air.
5) After making sure that the pump has been shut down and the pressure has been released, fully open the regulator, and close the air valve and drain valve of the pump.

⚠ CAUTION

- Keep a vessel below the relief valve to catch any drain off.
- Fluid under pressure will gush out as soon as you open the valve, so be careful.
- If the pump will be unused for a prolonged period, purge and clean the pump (see the Operating caution on P.3).

6. Method of cleaning

⚠ WARNING

- Before starting operation, make sure that compressed air is not supplied to the pump.
- Before starting operation, make sure that the pump is not pressurized.

1) Remove the hose from the suction side of the pump.
2) Close the flow valve on the discharge side, open the drain valve, and then operate a pump by starting air pressure for a while to discharge any fluid remaining inside the pump as much as possible.
3) Remove the hose from the discharge side, and attach different hoses to the suction side and the discharge side for cleaning.
4) Be ready with a vessel with cleaning solution, select cleaning solution appropriate for the type of fluid pumped, and then connect the suction-side and the discharge-side hoses of the pump.
5) Operate a pump by starting air pressure slowly, and let the cleaning solution circulate for sufficient cleaning.
6) Finally, flush with clean water.
7) Remove the hose from the suction side of the pump, run the pump for a while and purge the pump of remaining fluid as much as possible.

⚠ CAUTION

- Be careful when removing piping. Fluid will gush out.
- After cleaning with clean water, turn the pump upside-down to drain out the water.

7. Daily check

- Before starting pump operation, be sure to conduct the following check every day. If any irregularity is found, do NOT start running the pump until the cause of the irregularity has been found and corrective measures have been taken.

a) Verify the drain flow through the air filter.
b) In case using a lubricator, verify the quantity of lubricating oil.
c) Make sure that there is no leakage of fluid from any connection part or the pump.
d) Make sure that there are no cracks in the pump casing or piping.
e) Check the tightness of every bolt of the pump.
(Refer to "maintenance manual" about the retighten of "Tie rod")
f) Make sure that the connection parts of the piping and peripheral equipment are not loose.
g) Make sure that the time has not elapsed for replacing any parts of the pump that are to be replaced at regular intervals. For details, see the maintenance manual.

8. Troubleshooting

8.1 Pump does not run

Cause	Action to be taken
The exhaust port (silencer) of pump is clogged with sludge.	Check and clean the exhaust port and silencer.
Air is not supplied.	Start the compressor, and open the air valve and air regulator.
The supply air pressure is low.	Check the compressor and the configuration of air piping.
Air leaks from connection parts.	Check the connection parts and tightness of bolts.
Air piping or peripheral equipment is clogged with sludge.	Check and clean the air piping.
The flow valve on the discharge side is not open.	Open the flow valve on the discharge side.
The spool stopped in neutral position.	Press the RESET button.
The fluid piping is clogged with sludge.	Check and clean the fluid piping.
The pump is clogged with sludge.	Disassemble the casing, check and clean.

8.2 Pump runs, but fluid does not come out

Cause	Action to be taken
The suction lift or discharge head is long.	Confirm the piping configuration and shorten the length.
The discharge-side fluid piping (including the strainer) is clogged with sludge.	Check and clean the fluid piping.
The valve on the suction side is not open.	Open the valve on the suction side.
The pump is clogged with sludge.	Disassemble the casing, check and clean.
The ball and valve seat are worn out or damaged.	Disassemble the manifold, check and replace parts.

8.3 Flow (discharge volume) decreased

Cause	Action to be taken
The supply air pressure is low.	Check the compressor and configuration of air piping.
Air piping or peripheral equipment is clogged with sludge.	Check and clean the air piping.
The discharge-side flow valve opens differently.	Adjust the discharge-side flow valve.
Air is taken in together with fluid.	Replenish fluid and check the configuration of the suction-side piping.
Cavitation occurs.	Adjust the supply air pressure and discharge pressure, and shorten the suction lift.
Chattering occurs.	Adjust the supply air pressure and discharge pressure. Reduce inlet flow valve to adjusting liquid pressure and volume.
Icing on air-switching portion.	Eliminate ice from air-switching valve and check and clean the air filter. Use external exhaust hose to control exhaust air speed. (Refer Fig.3.2)
The fluid piping (including the strainer) is clogged with sludge.	Check and clean the fluid piping and strainer.
The exhaust port (silencer) of the pump is clogged with sludge.	Check and clean the exhaust port and silencer.
The pump is clogged with sludge.	Disassemble the casing, check and clean.

8.4 Liquid leakage from exhaust port (silencer)

Cause	Action to be taken
The diaphragm is damaged.	Disassemble and check the pump and replace the diaphragm.
The fastening nuts for the center disk are loose.	Disassemble and check the pump. Tighten the nuts.

8.5 High air consumption during operation

Cause	Action to be taken
The seal ring and sleeve are worn out.	Disassemble the air-switch portion, check and clean. Replace parts as necessary.

8.6 Irregular noise

Cause	Action to be taken
The supply air pressure too high.	Adjust the supply air pressure.
The spool oscillates, and occur ball chattering.	Adjust the supply air pressure and discharge pressure. Reduce inlet flow valve to adjusting liquid pressure and volume.
The pump is clogged with sludge with particles of larger than the permissible diameter.	Disassemble the casing, check and clean.

8.7 Irregular vibration

Cause	Action to be taken
The supply air pressure is too high.	Adjust the supply air pressure.
The spool oscillates, and occur ball chattering.	Adjust the supply air pressure and exhaust pressure.
Connection parts and pump mounting are loose.	Check each connection part and tighten the bolts.

- If disassembly is required, refer to the maintenance manual and follow with the instructions.
- If any of the above mentioned causes does not apply to your problem, contact your dealer or our regional office.

9. Returning the product for servicing

9.1 Before returning the product

1) Purge the pump of fluid and clean (see [6. Method of cleaning]).
2) Return the product in the same package as when it was first shipped from the factory.

⚠ WARNING

- It will be the end-user responsibility to thoroughly wash a clean the pumps to prevent accidents caused by liquid leaks.

⚠ CAUTION

- Be sure to prevent liquid leak from pump for safe transport.

10. Main body specification

10.1 Main specifications

■ALE-5 series

Type		ALE-5FPT
Nominal Diameter		1/4″(6 mm)
Fluid Connection	Suction Port	Rc 1/4
	Discharge Port	
Air Connection	Supply Port	Rc 1/4
	Exhaust Port	Rc 3/8
Operating Air Pressure		0.2 - 0.7 MPa*1
Maximum Discharge Pressure		0.7 MPa*1
Discharge Volume/cycle*2		20 mL
Maximum Discharge Volume		11 L/min
Maximum Air Consumption		250 L/min(ANR)
Slurry Limitation*3		———
Limitation of Viscosity		0.1 Pa・s or less
Operating Ambient Temperature Range	Temp.	0 - 70 ℃
	Fluid Temp.	0 - 60 ℃
A-weighted emission sound pressure level*4		80 dB
A-weighted sound power level*5		90 dB
Weight		1.3 kg

■ALE-15 series

Type		ALE-15BAT	ALE-15BST	ALE-15FP□	ALE-15FVT
Nominal Diameter		1/2″(15mm)			
Fluid Connection	Suction Port	Rc 1/2			
	Discharge Port				
Air Connection	Supply Port	Rc 1/4			
	Exhaust Port	Rc 3/8			
Operating Air Pressure		0.2 - 0.7 MPa		0.2 - 0.7 MPa*1	
Maximum Discharge Pressure		0.7 MPa		0.7 MPa*1	
Discharge Volume/cycle*2		70 mL			
Maximum Discharge Volume		50 L/min		45 L/min	
Maximum Air Consumption		450 L/min(ANR)		350 L/min(ANR)	
Slurry Limitation		1 mm or less		——— *3	
Limitation of Viscosity		0.5 Pa・s or less			
Operating Ambient Temperature Range	Temp.	0 - 70 ℃			
	Fluid Temp.	0 - 100 °C		0 - 60 ℃	
A-weighted emission sound pressure level*4		84 dB		87 dB	
A-weighted sound power level*5		94 dB		97 dB	
Weight		4.1 kg	6.3 kg	3.5 kg	4.3 kg

*1. Maximum air pressure for non-metallic pumps decreases with temperature (See 26 page of Temperature Pressure Curve).
*2. Discharge Volume/cycle is highly dependent on application.
*3. Do not use the flat valve type pump for the liquids with slurry.
*4. The measuring method is based on ISO 1996.
*5. The measuring method is based on ISO 3774.

ALE-20 series

Type		ALE-20BAH	ALE-20BAT	ALE-20BST	ALE-20BPS	ALE-20BPT
Nominal Diameter		3/4″(20 mm)				
Fluid Connection	Suction Port	Rc 3/4				
	Discharge port					
Air Connection	Supply Port	Rc 1/4				
	Exhaust Port	Rc 3/4				
Operating Air Pressure		0.2 - 0.7 MPa		0.2 - 0.7 MPa*1		
Maximum Discharge Pressure		0.7 MPa		0.7 MPa*1		
Discharge Volume/cycle*2		350 mL	240 mL		350 mL	240 mL
Maximum Discharge Volume		110 L/min	100 L/min		110 L/min	100 L/min
Maximum Air Consumption		1200 L/min(ANR)	1400 L/min(ANR)		1200 L/min(ANR)	1400 L/min(ANR)
Slurry Limitation		2 mm or less				
Limitation of Viscosity		Suction Lift 3Pa·s or below Force In 8Pa·s or below				
Operating Ambient Temperature Range	Temp.	0 - 70 ℃				
	Fluid Temp.	0 - 80 ℃	0 - 100 ℃	0 - 60 ℃		
A-weighted emission sound pressure level*3		82 dB		81 dB	84 dB	
A-weighted sound power level*4		96 dB		92 dB	94 dB	
Weight		9.0 kg		12.5 kg	8.0 kg	

ALE-25 series

Type		ALE-25BAH	ALE-25BAT	ALE-25BST	ALE-25BPS	ALE-25BPT	ALE-25BVT
Nominal Diameter		1″(25mm)					
Fluid Connection	Suction Port	Rc 1					
	Discharge Port						
Air Connection	Supply Port	Rc 3/8					
	Exhaust Port	Rc 3/4					
Operating Air Pressure		0.2 - 0.7 MPa		0.2 - 0.7 MPa*1			
Maximum Discharge Pressure		0.7 MPa		0.7 MPa*1			
Discharge Volume/cycle*2		600 mL	500 mL		600 mL	500 mL	
Maximum Discharge Volume		160 L/min					
Maximum Air Consumption		1600 L/min(ANR)	1800 L/min(ANR)		1600 L/min(ANR)	1800 L/min(ANR)	
Slurry Limitation		3 mm or less					
Limitation of Viscosity		Suction Lift 3Pa·s or below Force In 8Pa·s or below					
Operating Ambient Temperature Range	Temp.	0 - 70 ℃					
	Fluid Temp.	0 - 80 ℃	0 - 100 ℃	0 - 60 ℃			
A-weighted emission sound pressure level*3		81 dB			86 dB		
A-weighted sound power level*4		92 dB			96 dB		
Weight		13.0 kg		18.0 kg	11.0 kg		13.5 kg

*1. Maximum air pressure for non-metallic pumps decreases with temperature (See 26 page of "Temperature Pressure Curve").
*2. Discharge Volume/cycle is highly dependent on application.
*3. The measuring method is based on ISO 1996.
*4. The measuring method is based on ISO 3744.

■ALE-40 series

Type		ALE-40BAH	ALE-40BAT	ALE-40BPS
Nominal Diameter		1·1/2" (40mm)		
Fluid Connection	Suction Port	Equivalent to ANSI flange 150 1·1/2 & NPT 1·1/2		Equivalent to ANSI flange 150 1·1/2
	Discharge Port			
Air Connection	Supply Port	Rc 1/2		
	Exhaust Port	Rc 1		
Operating Air Pressure		0.2 - 0.7 MPa		0.2 - 0.7 MPa*1
Maximum Discharge Pressure		0.7 MPa		0.7 MPa*1
Maximum Suction Lift Capability(Dry)		5.2 m	3.2 m	5.9 m
Discharge Volume/cycle*2		1900 mL	1000 mL	2000 mL
Maximum Discharge Volume		350 L/min	320 L/min	350 L/min
Maximum Air Consumption		4800 L/min(ANR)		4900 L/min(ANR)
Slurry Limitation		7 mm or less		
Limitation of Viscosity		Suction Lift 3Pa·s or below Force In 8Pa·s or below		
Operating Ambient Temperature Range	Temp.	0 - 70 ℃		
	Fluid Temp.	0 - 80 ℃	0 - 100 ℃	0 - 60 ℃
A-weighted emission sound pressure level*3		98 dB		
A-weighted sound power level*4		106 dB		
Weight		27.2 kg	26.7 kg	27.2 kg

■ALE-50 series

Type		ALE-50BAH	ALE-50BST	ALE-50BPT	ALE-P50BPT	ALE-P50BVT
Nominal Diameter		2″(50mm)				
Fluid Connection	Suction Port	Equivalent to JIS flange 10K50A				
	Discharge Port					
Air Connection	Supply Port	Rc 3/4				
	Exhaust Port	Rc 1				
Operating Air Pressure		0.2 - 0.7 MPa		0.2 - 0.7 MPa*1		
Maximum Discharge Pressure		0.7 MPa		0.7 MPa*1		
Discharge Volume/cycle*2		4300 mL	2500 mL	2100 mL	2300 mL	
Maximum Discharge Volume		660 L/min	600 L/min	550 L/min	560 L/min	
Maximum Air Consumption		6300 L/min(ANR)		6000 L/min(ANR)	5500 L/min(ANR)	
Slurry Limitation		8 mm or less				
Limitation of Viscosity		Suction Lift 3Pa·s or below Force In 8Pa·s or below				
Operating Ambient Temperature Range	Temp.	0 - 70 ℃				
	Fluid Temp.	0 - 80 ℃	0 - 100 °C	0 - 60 ℃		
A-weighted emission sound pressure level*3		98.5 dB		100 dB	99 dB	
A-weighted sound power level*4		110 dB				
Weight		34.5 kg	58.5 kg	35 kg	37 kg	43 kg

*1. Maximum air pressure for non-metallic pumps decreases with temperature (See 26 page of "Temperature Pressure Curve").
*2. Discharge Volume/cycle is highly dependent on application.
*3. The measuring method is based on ISO 1996.
*4. The measuring method is based on ISO 3744.

■ALE-80 series

Type		ALE-80BAH	ALE-80BAT
Nominal Diameter		3″(80 mm)	
Fluid Connection	Suction Port	Equivalent to JIS flange 10K80A	
	Discharge Port		
Air Connection	Supply Port	Rc 3/4	
	Exhaust Port	Rc 1	
Operating Air Pressure		0.2 - 0.7 MPa	
Maximum Discharge Pressure		0.7 MPa	
Discharge Volume/cycle*1		8700 mL	3500 mL
Maximum Discharge Volume		810 L/min	630 L/min
Maximum Air Consumption		7100 L/min(ANR)	
Slurry Limitation		10 mm or less	
Limitation of Viscosity		Suction Lift 3Pa·s or below Force In 8Pa·s or below	
Operating Temperature Range	Temp. Ambient	0 - 70 ℃	
	Temp. Liquid	0 - 80 ℃	0 - 100 ℃
A-weighted emission sound pressure level*2		95.5 dB	
A-weighted sound power level*3		107 dB	
Weight		62 kg	58.5 kg

*1 Discharge Volume/cycle is highly dependent on application.
*2 The measuring method is based on ISO 1996.
*3 The measuring method is based on ISO 3744.

Liquid TEMP.-MAX. Supply Air Pressure Curve

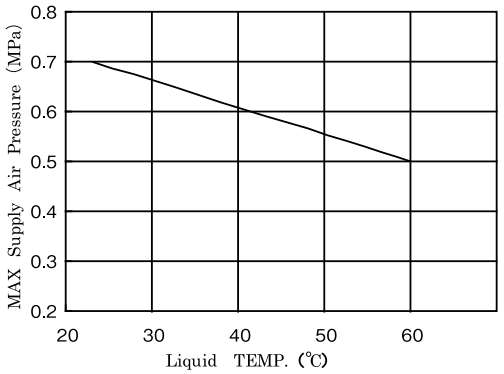

10.2 Appearance and dimensions

10.2.1 ALE-5 series

■ALE-5FPT

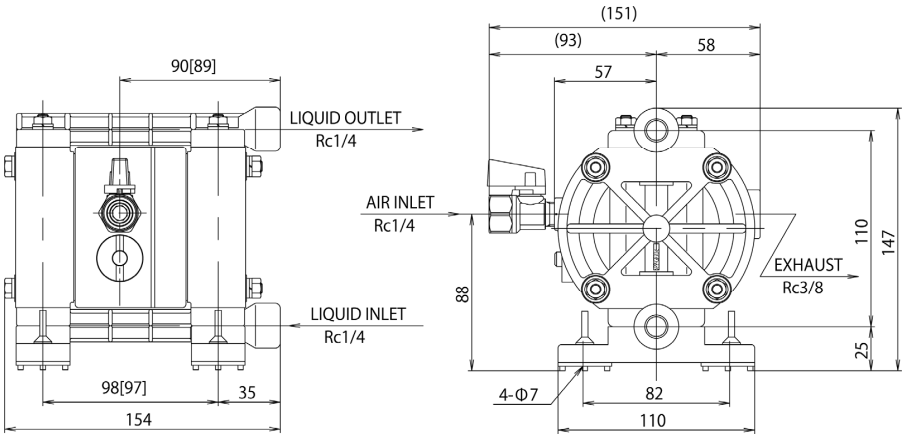

10.2.2 ALE-15 series

■ALE-15BAT

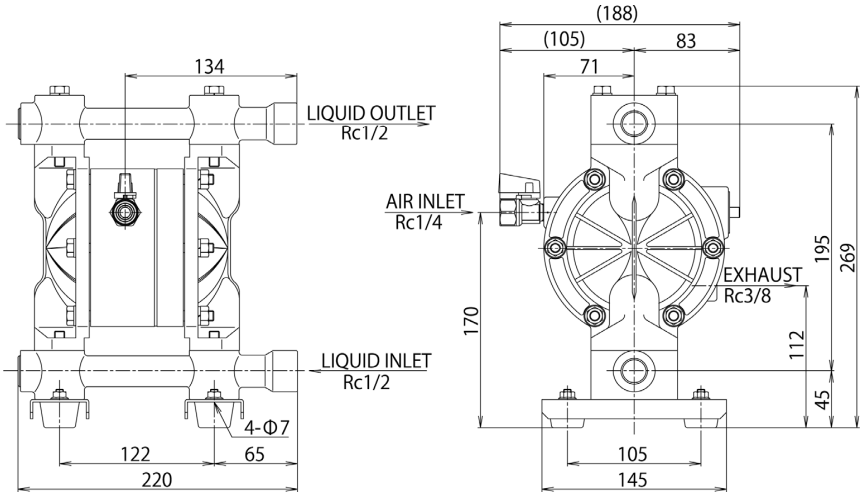

■ALE-15BST

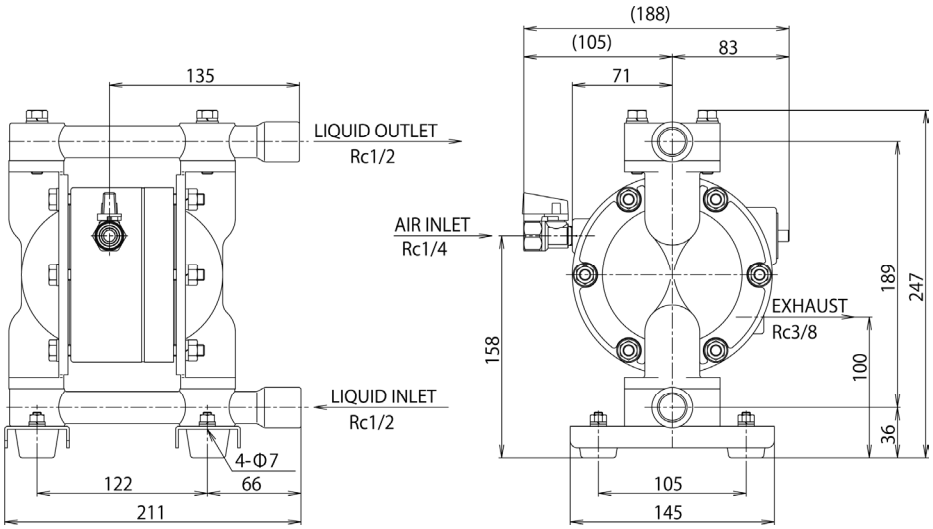

■ALE-15FP□/ FVT

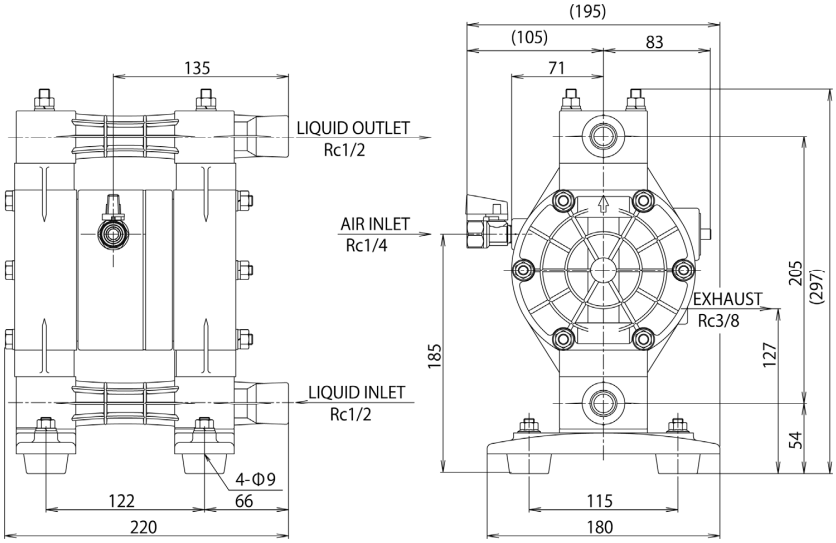

10.2.3 ALE-20 series

■ALE-20BA□

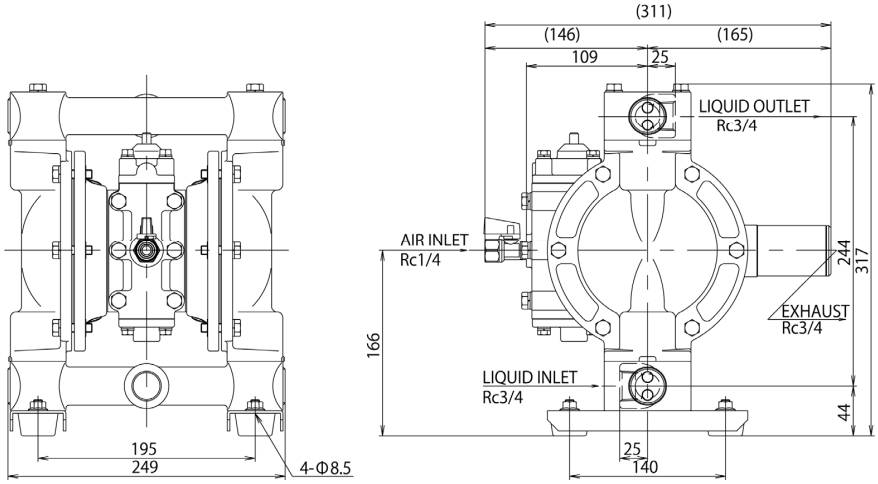

■ALE-20BST

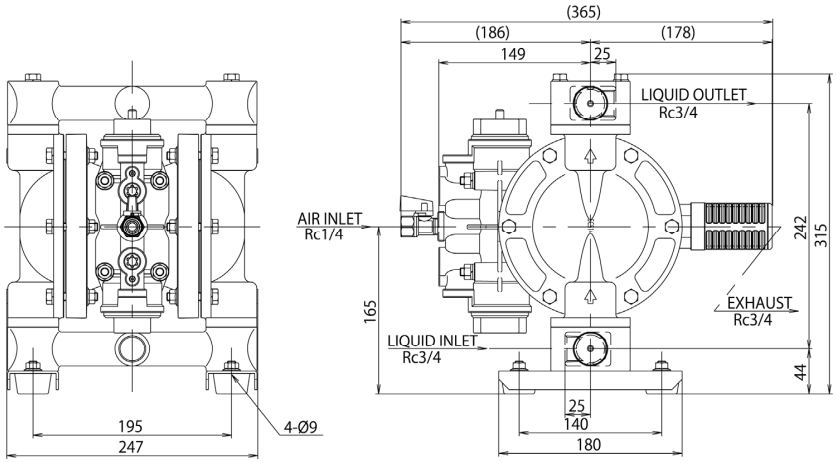

■ALE-20BP□

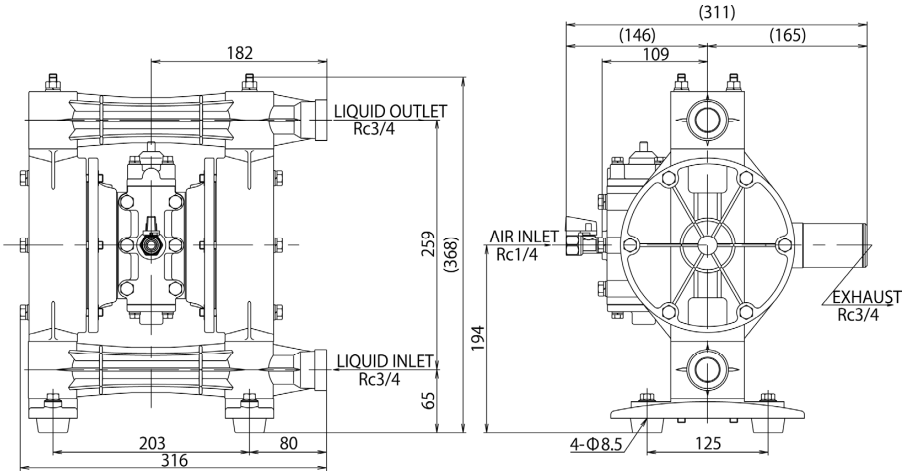

10.2.4 ALE-25 series

■ALE-25BA□

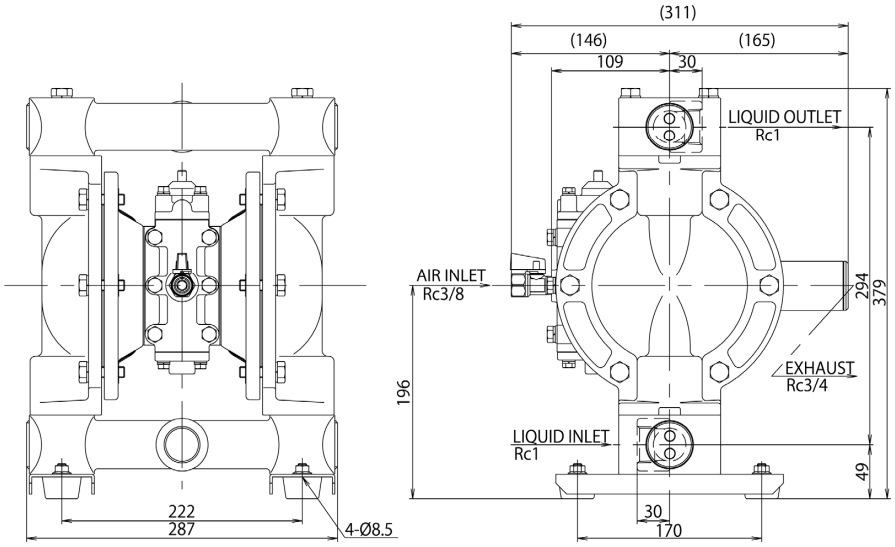

■ALE-25BST

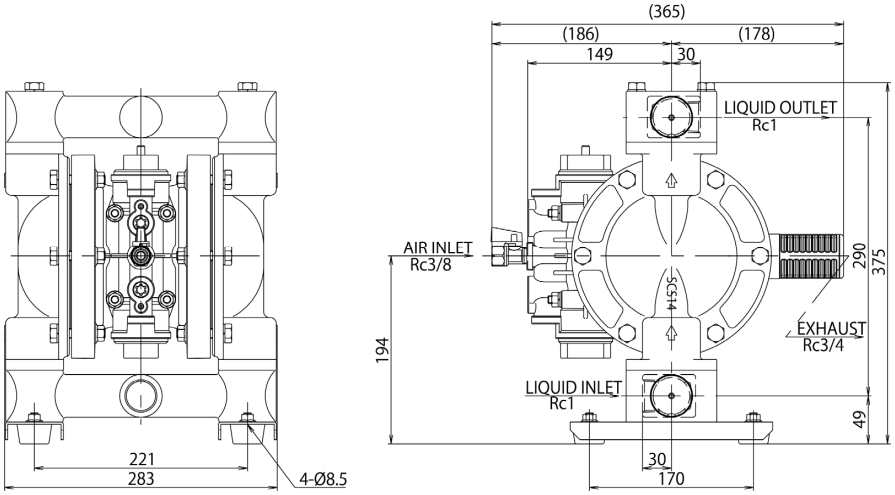

■ALE-25BP□

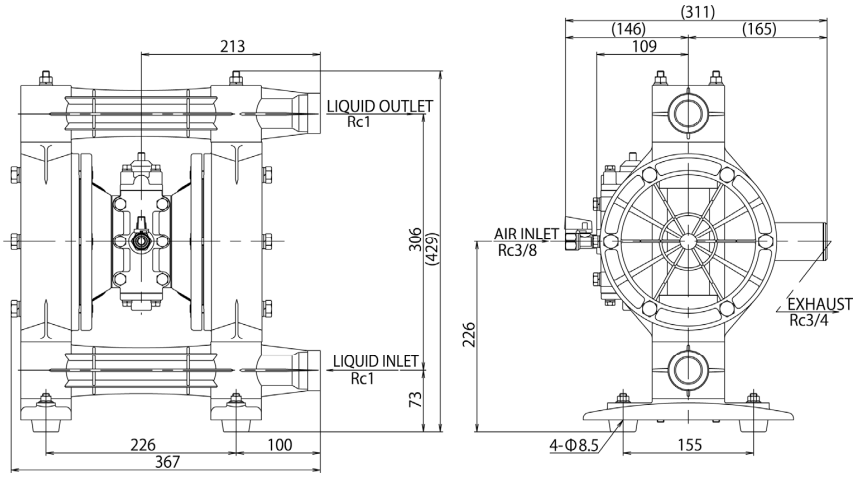

■ALE-25BVT

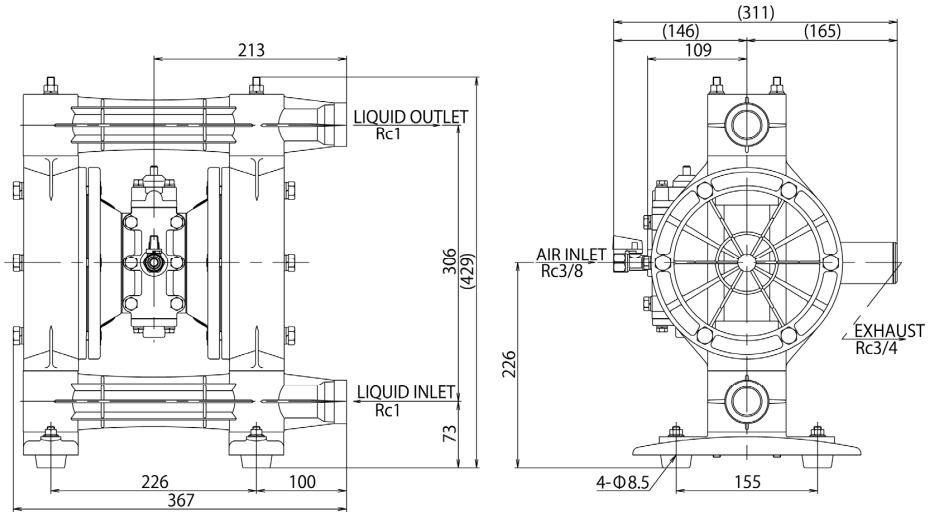

10.2.5 ALE-40 series

■ALE-40BA□

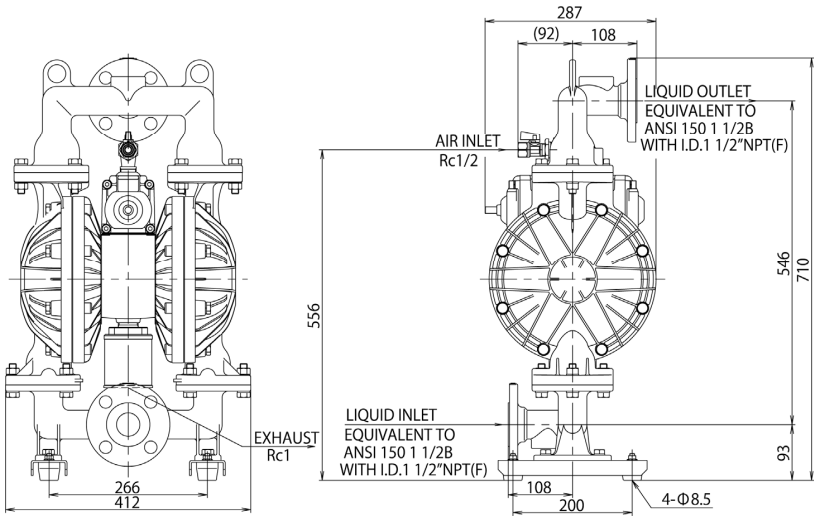

■ALE-40BPS

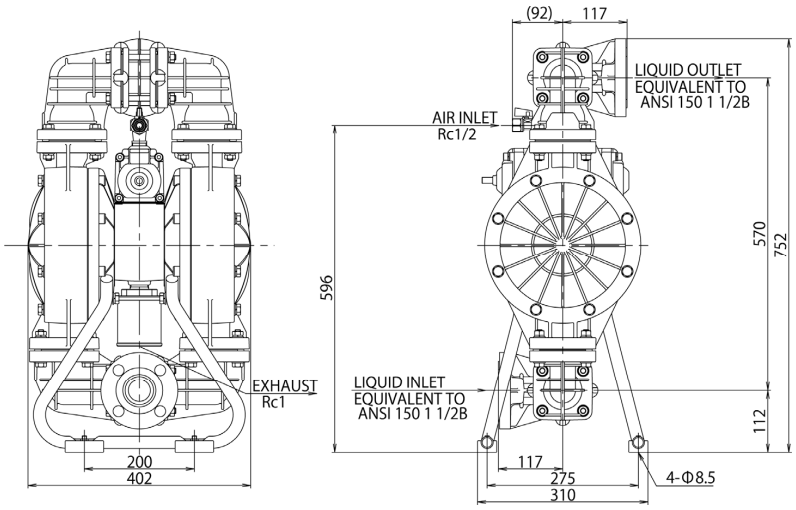

10.2.6 ALE-50 series

■ALE-50BAH

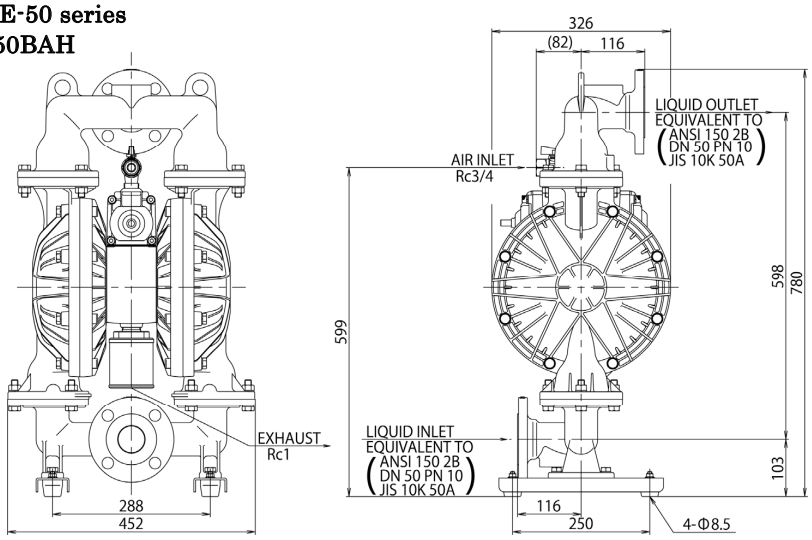

■ALE-50BST

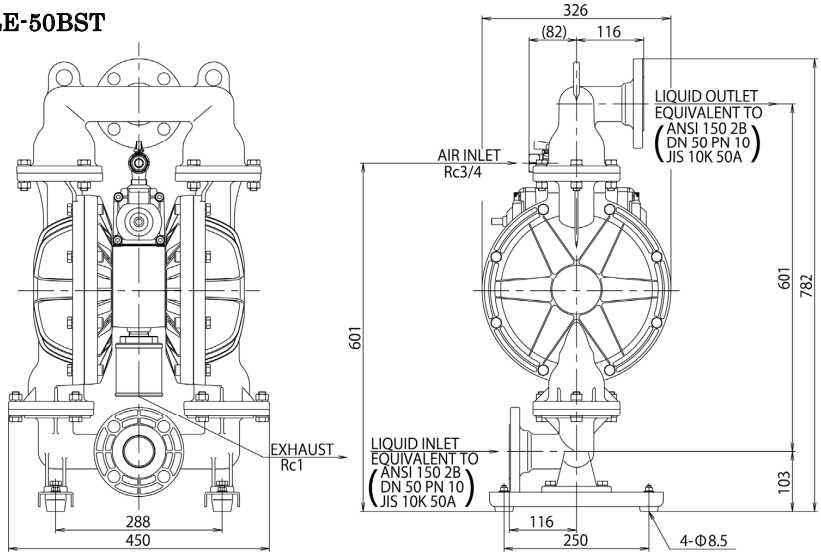

■ALE-50BPT

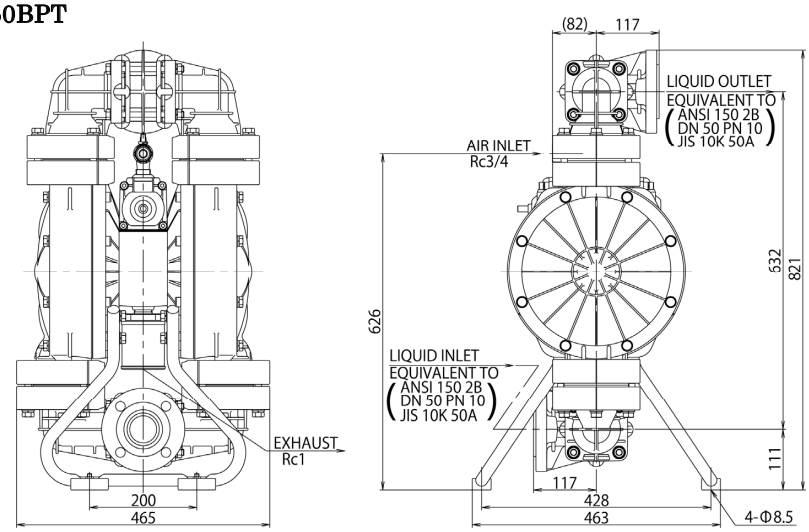

10.2.7 ALE-P50 series

■ALE-P50BPT

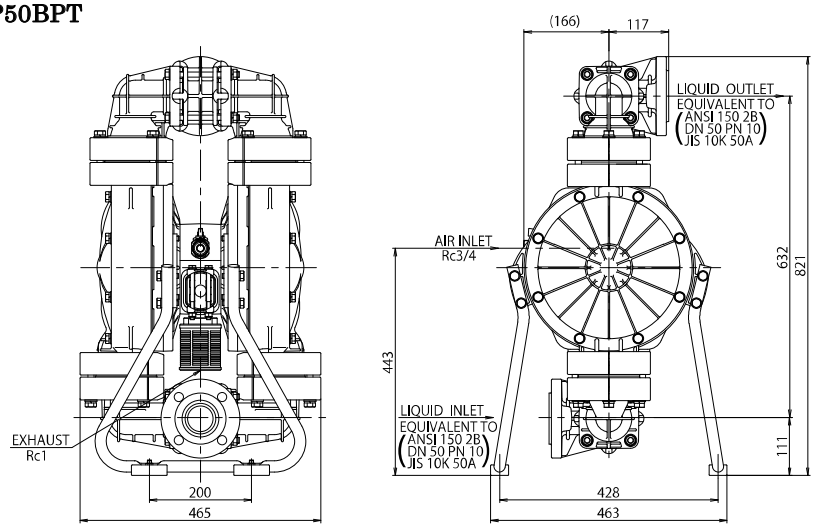

■ALE-P50BVT

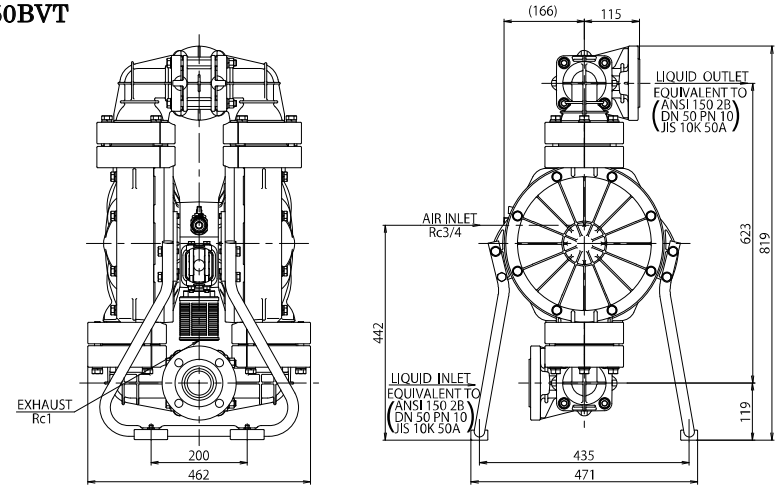

10.2.8 ALE-80 series

■ALE-80BA□

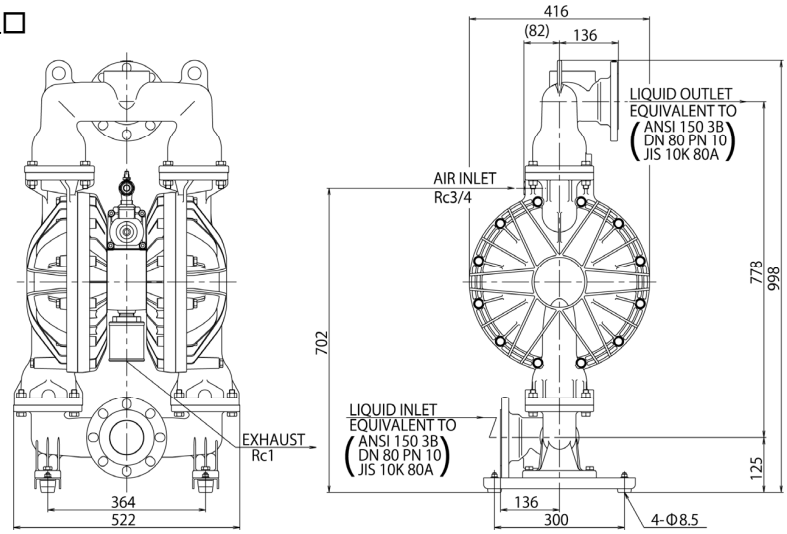

⚠ CAUTION

- Due to improvement or modification of products, dimensions may change without notice.
  Please contact your distributor our regional office for detailed information.

10.3 Performance curve

10.3.1 ALE-5 series

■ALE-5FPT

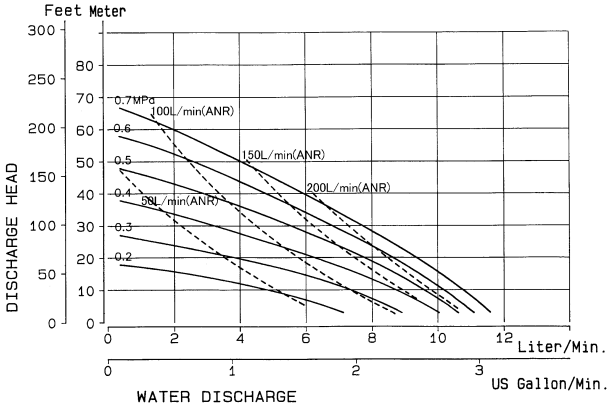

10.3.2 ALE-15 series

■ALE-15BAT/BST

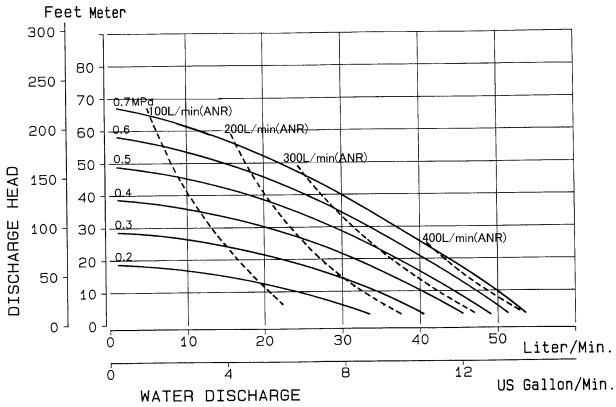

■ALE-15FP□/FVT

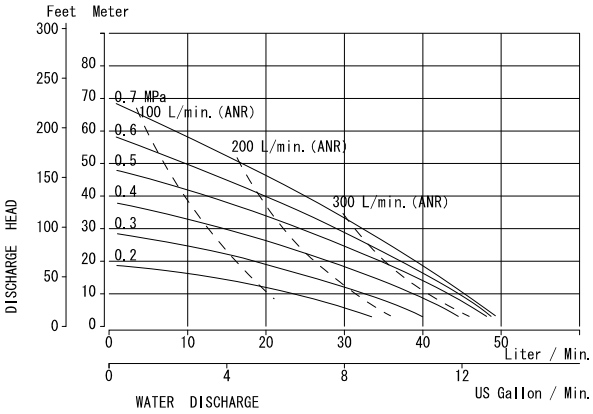

10.3.3 ALE-20 series

■ALE-20BAH/BPS

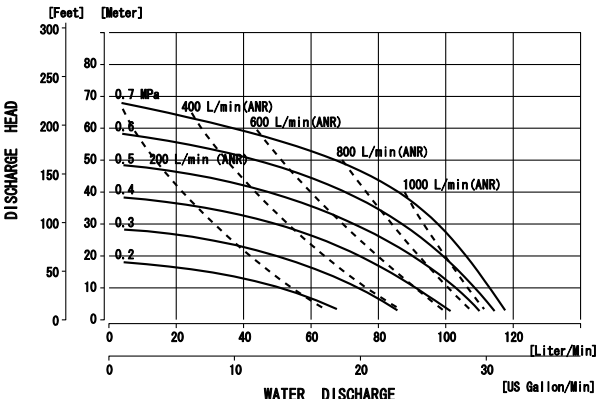

■ALE-20BAT/BST/BPT

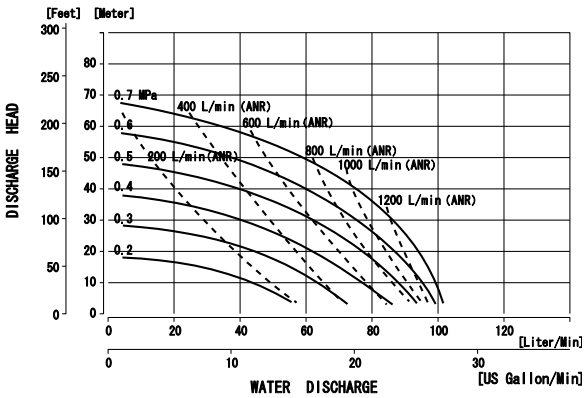

10.3.4 ALE-25 series

■ALE-25BAH/BPS

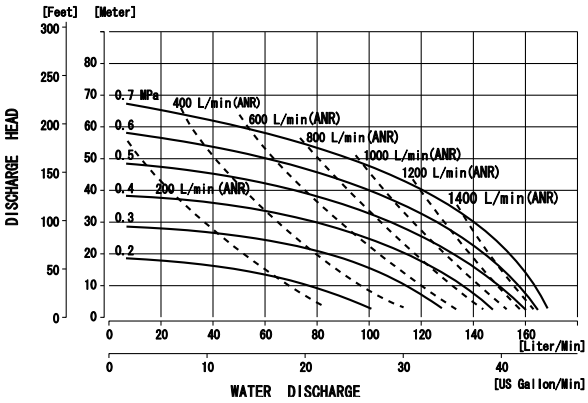

■ALE-25BAT/BST/BPT/BVT

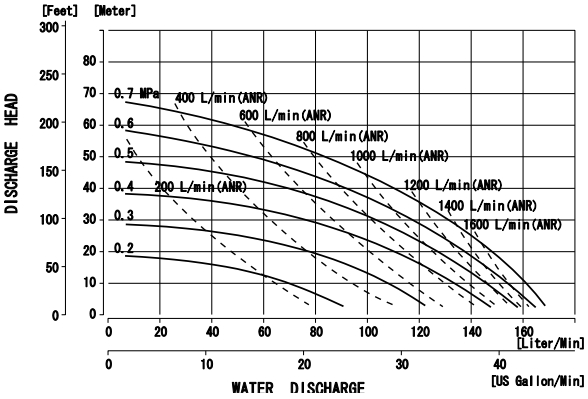

10.3.4 ALE-40 series

■ALE-40BAH

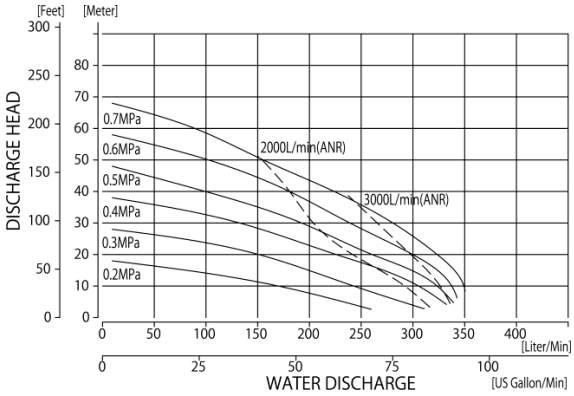

■ALE-40BAT

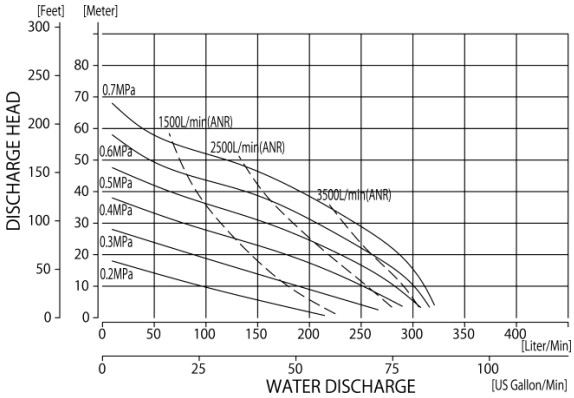

■ALE-40BPS

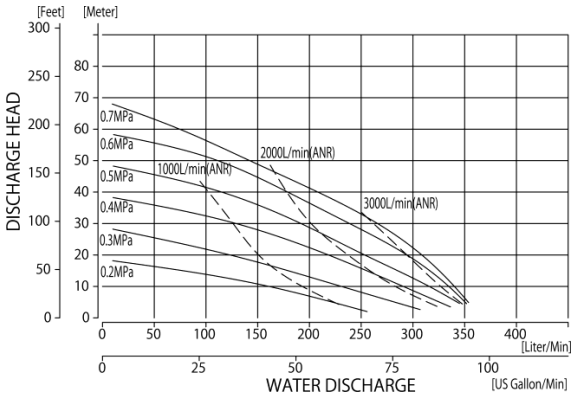

10.3.5 ALE-50 series

■ALE-50BAH

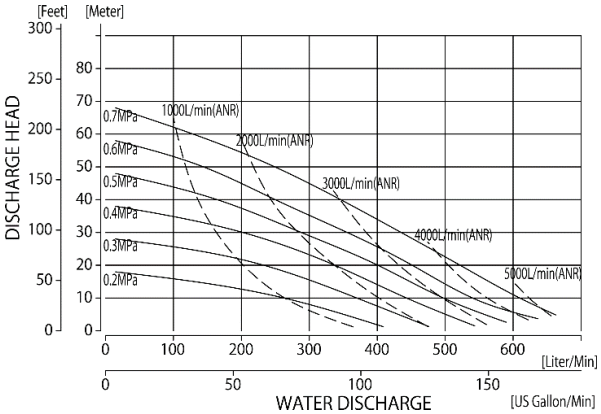

■ALE-50BST

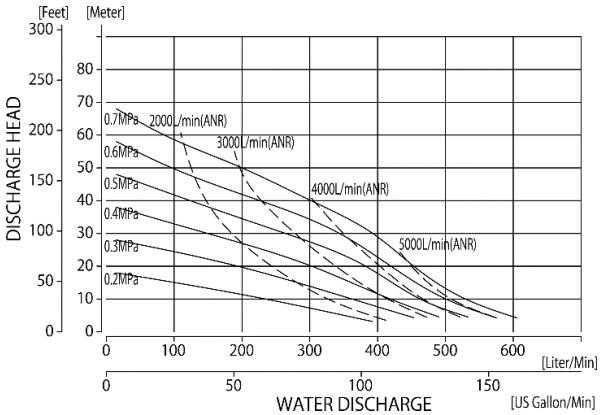

■ALE-50BPT

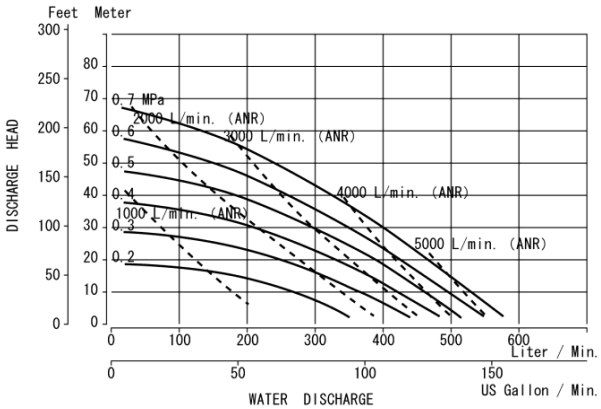

10.3.6 ALE-P50 series

■ALE-P50BPT/BVT

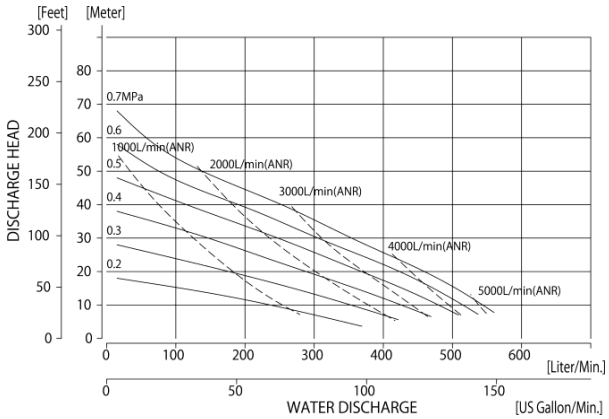

10.3.7 ALE-80 series

■ALE-80BAH

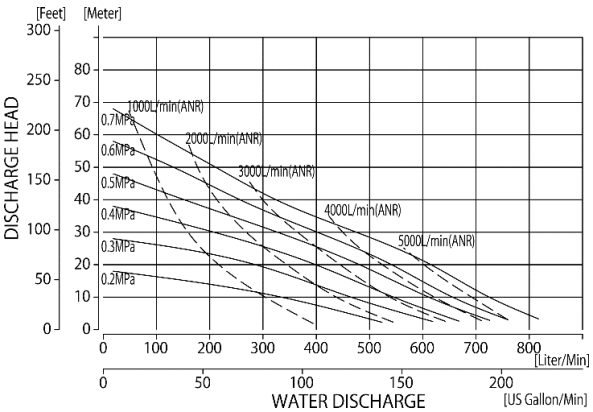

■ALE-80BAT

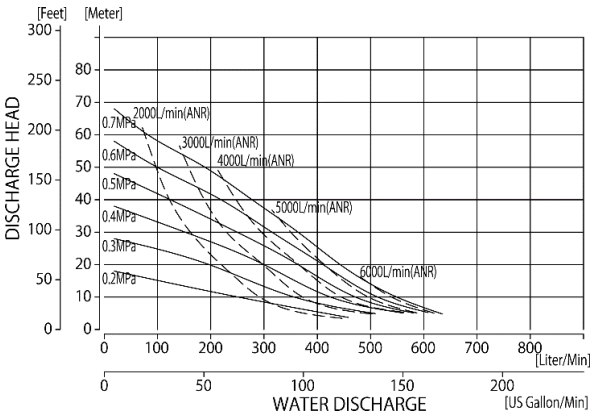

NOTE: Method of measurement of performance curve

Measuring instruments and procedure

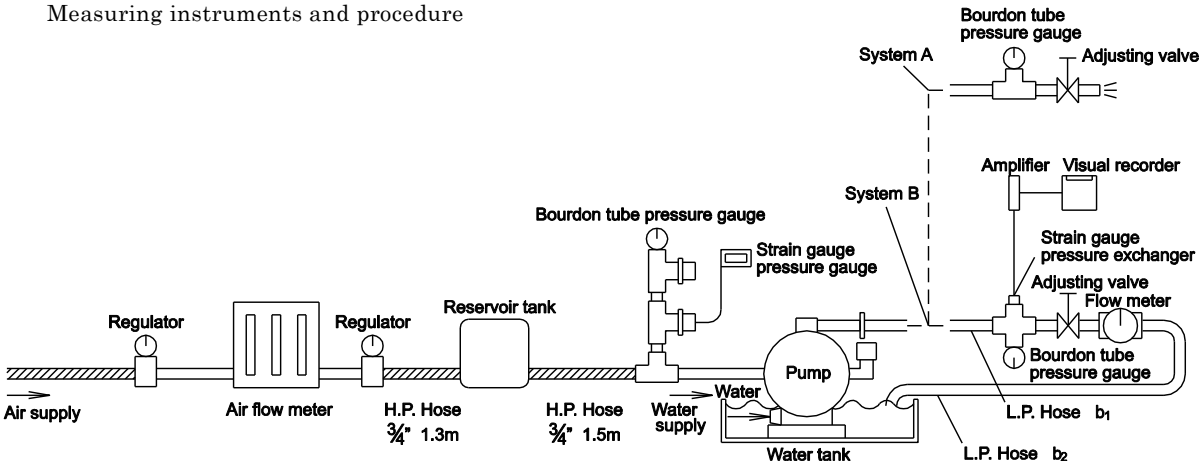

Fig.10.1

▪ Conditions

a) Supplied air pressure: Maintaining preset pressure

b) Liquid pumped: Fresh water

c) Temperature: Ambient

d) Condition of suction: Flat suction 0 meter head

e) Measuring system: System A ..... Converting weight of discharged fluid to volume.
System B ..... By liquid meter

11. Warning symbols

BEWARE: HIGH TEMPERATURE

ELECTRIC SHOCK

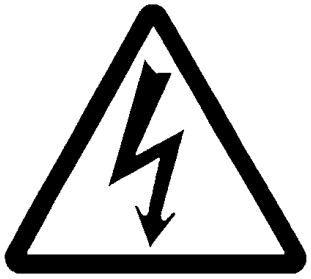

POISON

FLAMMABLE

CORROSION

EXPLOSION

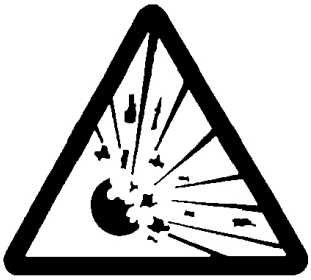

General warnings, cautions and danger notifications

FIRE STRICTLY PROHIBITED

©YAMADA CORPORATION