CATALOG & TECHNICAL GUIDE 2020.1

THREADING

SECO

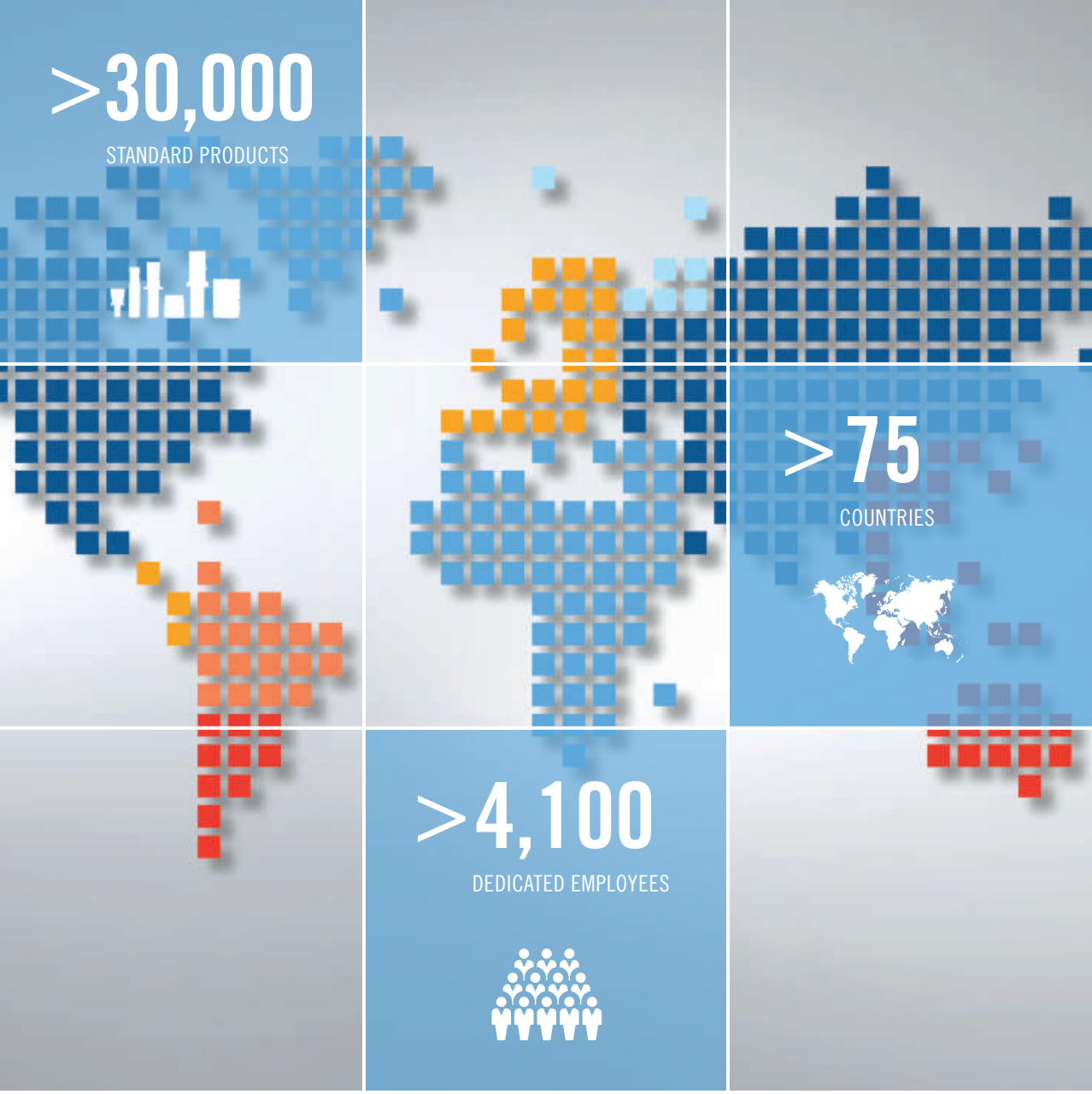

Headquartered in Fagersta, Sweden and present in more than 75 countries, Seco Tools is a leading global provider of metal cutting solutions for milling, stationary tools, holemaking and tooling systems.

For more than 80 years, the company has provided the technologies, processes and support that manufacturers depend on for maximum productivity and profitability. For more information on how Seco's innovative products and expert services bring success to manufacturers across all industry segments, please visit www.secotools.com.

Table of content

Alphanumeric index

Tools 2-3
Inserts 4-5

Thread turning

Technical information 6-30
Application overview, toolholders 31-33
Application overview, inserts 34
Oil and gas threading, introduction 35-39
ISO attribute information 40
Jetstream Tooling® – introduction 41
Jetstream Tooling® – assembly, accessories 42-43
Jetstream Tooling® – Toolholders, external 44
Jetstream Tooling® – Toolholders, internal 45-47
Toolholders, external 48-54
Toolholders, internal 55-59
Seco-Capto™ – Toolholders, external 60-64
Seco-Capto™ – Toolholders, internal 65-72
Steadyline® GL-heads, Jetstream Tooling® 73-74
Steadyline® – GL-heads 75
Quick Change, Jetstream Tooling® QC-heads, external 76
Seco-Capto™ – Toolholders for MTM 77-78
Toolholders for peeling 79
Toolholders for pipe-facing 80
Inserts for peeling 81
Toolholders, internal, Seco-Capto™, Multi insert pocket tools 82-83
Toolholders for chasers, external 84
Seco-Capto™ Toolholders 85-89
Steadyline® – GL-heads 90
Inserts 91-124
Chipformers 125-126

Thread MDT

Toolholders, external 127
Inserts 128-129

Thread Mini-Shaft™

Toolholders 130
Inserts 131-135

Rotating threading

Technical information 136-150
Threadmaster™, Cutters 151-154
Thread milling Indexable 155-158
Thread milling, inserts 159-162
Thread milling – Shanks 163-164
Thread milling – Heads 165-167
Threadmaster™ Taps, Technical information 168-185
Threadmaster™ Taps 186-269

SMG

Workpiece Materials – SMG 270-281

Declaration of conformity

..... 282-284

3
335.14 163
335.14-ER 164

A
A..-SGXN. 130
A..-SGXN..-R 130

C
C..CER/L..X 85
C..CNR/L..X. 85-87
C..CNR/L.C-X 88-89
C.-CER/L-..CHD 62-63
C.-CER/L-..HD. 60-61, 64, 77-78
C.-CNR/L-..CHD 70-72
C.-CNR/L-..HD. 65-69
C.-DSKNR/L-PCLNR/L 82
C.-MSKNR/L-PCLNR/L 83
C.-SNR 65
CER/L 48
CER/L...QHD 53-54
CER/L...HD 48-49, 53-54
CER/L...Q 50
CER/L...QHD 48, 50-51
CER...X 84
CER...CQHD. 52
CFIR/L 127
CNR/L...AHD. 56-59
CNR/L...APIHD 57-58
CSXCR/L. 79

D
DTM-M. 154
DTM-MF 154
DTM-UNC 154
DTM-UNF 154
DTM-W 154

E
E..-SGXN. 130
E..-SGXN..-R 130

G
GL..-CNR/L 75
GL..CNR/L..X. 90
GL..PNR/L 73-74

M
MF-V053 226
MF-V054 227
MF-V055 228
MF-V056 229
MF-V057 230
MF-V058 231
MF-V059 232
MF-V060-A 233
MF-V063 234
MF-V063-A 235
MSGNR/L 80
MTH-M003. 204
MTH-M003-A. 205
MTH-M004. 206
MTH-M004-A. 207
MTH-N001 220
MTH-N002 221
MTH-P001 186
MTH-P001-A 187
MTH-P002 188
MTH-P002-A 189
MTH-P003 190
MTH-P003-A 191
MTH-P004 192
MTH-P004-A 193
MTH-P011 194-195
MTH-V011 236
MTH-V015 237
MTH-V016 238
MTH-V025 239
MTH-V026 240
MTH-V028 241
MTH-V029 242
MTH-V030 243
MTH-V030-A 244
MTH-V033 245
MTH-V033-A 246
MTH-V038 247-248
MTH-V038-A 249-250
MTH-V040 251
MTH-V043 252
MTH-V045 253
MTH-V048 268
MTH-V050 269
MTP-M003. 208
MTP-M003-A 209
MTP-M004 210
MTP-M004-A 211
MTP-N001 222
MTP-N001-A 223
MTP-N002 224
MTP-N002-A 225
MTP-P001 196
MTP-P002 197
MTP-P003 198
MTP-P003-A 199
MTP-P004 200
MTP-P004-A 201
MTP-P011 202-203
MTP-V001 254
MTP-V002 255-256
MTP-V005 256
MTP-V006 257
MTP-V007 258
MTP-V007-A 259
MTP-V008 260
MTP-V008-A 261
MTP-V014 262-263
MTP-V014-A 264
MTP-V017 265
MTP-V020 266
MTP-V023 267
MTS-K001 212
MTS-K001-A 213

MTS-K002 214
MTS-K002-A 215
MTS-K011 216
MTS-K021 217
MTS-K031 218
MTS-K041 219

P
PER..QHDJETI 44
PNR/L..AHDJET 45-47

Q
QC..-PER/L-..HDJET 76

R
R396.18 . . . . . 155, 158
R396.19 . . . . . 155-156, 158
R396.20 157-158

S
SNR/L 55
SNR...A 55

T
TM-M 151
TM-MF 151
TM-MINI 153
TM-NPT 152
TM-NPTF 152
TM-UNC 151
TM-UNF 152
TM-W 152

09NR
..A55 92
..A60 94
..BSPT 107
..ISO. 97
..NPT 109
..UN 101
..W 106

11NR/L
..A55 92
..A60 94
..ISO. 97-98
..NPT 109
..UN 101
..W 106

11NR
..NPTF 110

13NMS. 159

16ER/L
..A55 91
..A60 93
..ACME 114
..APIRD 121
..BSPT 107
..ISO. 95-96
..MJ 104
..NPT 108
..NPTF 110
..RD 111
..STACME 116
..TR 112
..UN 99-101
..UNJ 103
..W 105

16NR/L
..A55 92
..A60 94
..ACME 115
..API RD. 121
..BSPT 107
..ISO. 97-98
..MJ 104
..NPT 109
..NPTF 110
..RD 111
..STACME 117
..TR 113
..UN 102
..UNJ 103
..W 106

20ER
..ACME 114
..STACME 116
..TR 112

20NR
..ACME 115
..STACME 117
..TR 113

22ER/L
..ACME 114
..API RD. 121
..BUT 122-123
..HEF 119
..ISO. 95-96, 98
..N55 91
..N60 93
..NPT 108
..RD 111
..STACME 116
..TR 112
..UN 99-100
..W 105

22ER
..API. 118

22NR/L
..ACME 115
..BUT 123
..HEF 120
..ISO. 97
..N55 92
..N60 94
..NPT 109
..RD 111
..STACME 117
..TR 113
..UN 101-102
..W 106

22NR
..API. 118
..BUT 122

26ER
..ACME 114
..K55 91
..K60 93
..STACME 116
..TR 112

26NR
..ACME 115
..K55 92
..K60 94
..TR 113

27ER/L
..ACME 114
..H 119
..ISO. 95-96
..RD 111
..TR 112
..UN 99

27ER
..API 118, 121
..NPT 108
..STACME 116

27NR
..ACME 115
..API 118, 121
..H 120
..ISO. 97-98
..RD 111
..STACME 117
..TR 113
..UN 101

369.20 162

396.19-4003 160

396.19-4005 161

C-... 125-126

LCEX 131-135

LCGN 128-129

R335.14...MNP 166

R335.14...UNNF 167

R335.14...WXF 165

R396.19 161

Toolholders

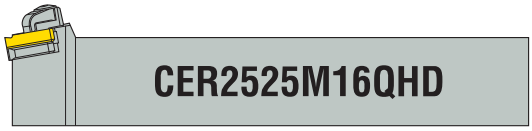

C	E	R	25	25	M	16	Q	HD
1	2	3	4	5	6	7	8	9

1. Insert clamping

S

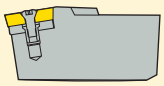

Screw

C

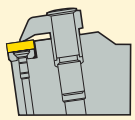

Clamp

P

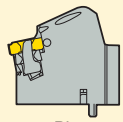

Pin

2. External/Internal

E = External
N = Internal

3. Cutting direction

L

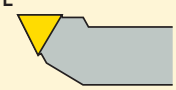

R

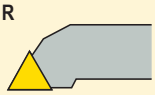

X = Special

4. Shank height

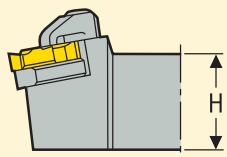

00 = Round toolholders S & C
25 = 25 mm
32 = 32 mm
etc.

5. Shank width/diameter

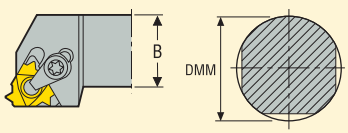

20 = 20 mm
25 = 25mm
etc.

6. Tool length

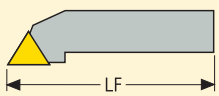

H = 100 mm R = 200 mm
K = 125 mm S = 250 mm
L = 140 mm T = 300 mm
M = 150 mm U = 350 mm
P = 170 mm V = 400 mm
Q = 180 mm

7. Cutting edge length

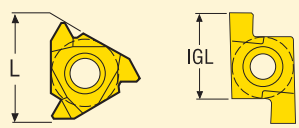

If the cutting edge length consists of only one digit, the designation should start with a 0.

Example:

Cutting edge length	= 16,5 mm
Symbol	= 16
Cutting edge length	= 9,525 mm
Symbol	= 09

8. Other information

A = Steel with coolant passage
Q = Toolholder/cranked
CQ = For mounting upside down

9. Other information

HD = Heavy duty
JET = Jetstream Tooling®
JETI = Jetstream Tooling® Jeti

Inserts

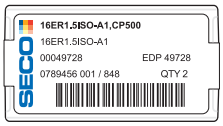

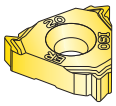

16	E	R	1.5	ISO	-	A1
1	2	3	4	5		6

1. Cutting edge length

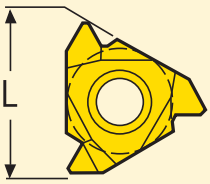

If the cutting edge length consists of only one digit, the designation should start with a 0.

Example:

Cutting edge length	= 16,5 mm
Symbol	= 16
Cutting edge length	= 9,525 mm
Symbol	= 09

2. External/Internal

E = External
N = Internal

3. Cutting direction

L

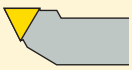

R

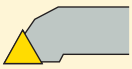

X = Special

4. Pitch

Full profile mm:	0,50	1,25	3,00	6,00	
	0,70	1,50	4,00	8,00	
	0,75	1,75	4,50	10,0	
	0,80	2,00	5,00	12,0	
	1,00	2,50	5,50	14,0	
Full profile: (TPI)	48	18	11	6,0	2,5
	40	16	10	5,0	2,0
	32	14	9	4,5	
	24	13	8	4,0	
	20	12	7	3,0	

Partial profile:	A	= 0,50-1,50 mm	48-16 TPI
	AG	= 0,50-3,00 mm	48-8 TPI
	G	= 1,75-3,00 mm	14-8 TPI
	N	= 3,50-5,00 mm	7-5 TPI
	K	= 5,50-10,00 mm	4,5-2,5 TPI

5. Thread

Thread =

60	= V profile, 60°
55	= V profile, 55°
ISO	= ISO, Metric
UN	= Am. UN
UNJ	= Am. Aerospace
MJ	= Metr. Aerospace
W	= Whitworth, BSW
BSPT	= Whitworth, Taper
NPT	= Am. NPT
NPTF	= Am. NPTF (Dryseal)
RD	= Round, DIN405
TR	= Trapezoidal, DIN103
ACME	= Am. ACME-G
STACME	= Am. Stub-ACME
API 384	= API V 038R 1:4
API 386	= API V 038R 1:6
API 404	= API V 040 1:4
API 504	= API V 050 1:4
API 506	= API V 050 1:6
API RD	= API Round Casing
BUT 2.5	= Buttress, 1°47'
BUT 2.6	= Buttress, 2°23'
VAM	= VAM Vallourec

6. Number of teeth per cutting edge/ Type of chipbreaker

2M = 2 teeth
3M = 3 teeth
TT = TWIN THREADER

A = Universal
A1 = Chipbreaker designation
A2 = Chipbreaker designation

Suggest and Threading Wizard™

In order to simplify the selection of tools and cutting parameters Seco Tools introduce Suggest which eliminates complicated searching, programming and calculation. Suggest give you the best suggestion of holder, insert and optimized parameters for your application and the possibility to download information to the CNC machine.
The Threading Wizard selects the optimum holder and insert, identifies the best operating parameters and then downloads the information to the CNC machine. The infeed series generated are based on a good control of the OD/ID tolerance for the selected profile. Both applications can be found at https://www.secotools.com/#dashboard under application Suggest https://www.secotools.com/#dashboard/Suggest/Suggest or Threading Wizard https://www.secotools.com/#dashboard/Portal/ThreadingWizard. If not using the Wizard use the selection process below to choose a suitable tool, insert, cutting data and production method.

1. Selection of production method, page 9.

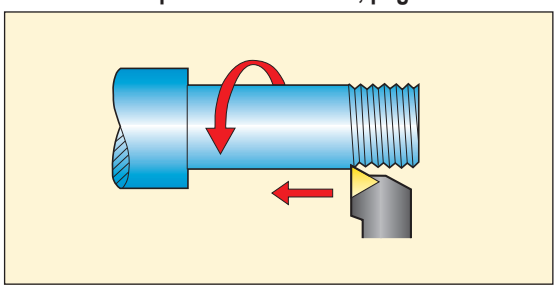

2. Selection of insert type, page 10.

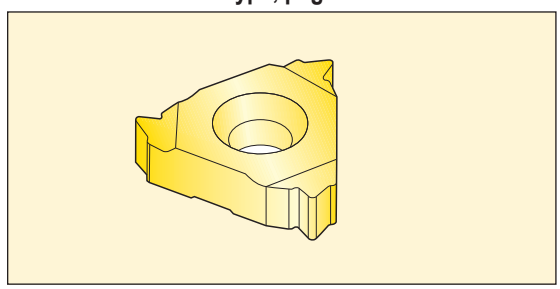

3. Selection of grade, page 12.

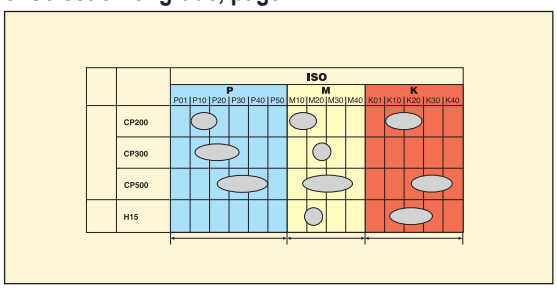

4. Selection of toolholder, page 13.

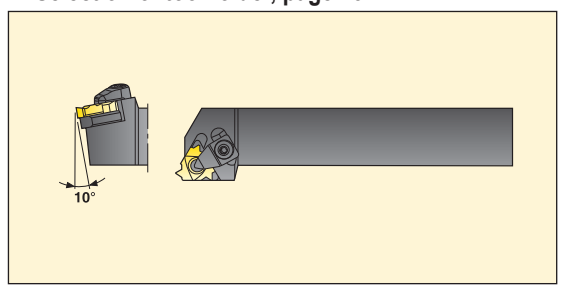

5. Selection of insert shim, pages 14-15.

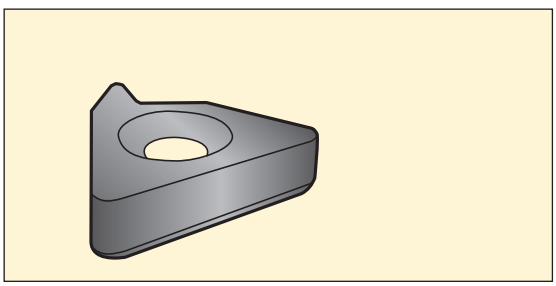

6. Selection of cutting speed, pages 16-19.

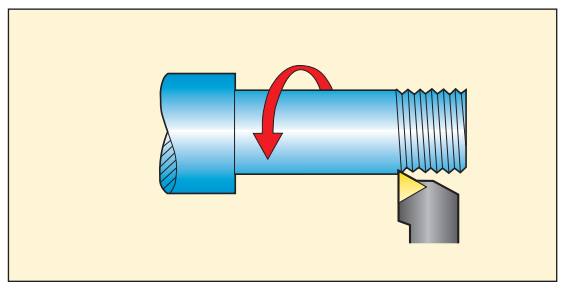

7. Selection of number of passes and infeed depths, pages 20-24.

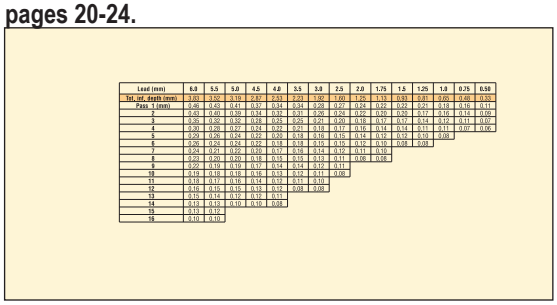

Lead (mm)	6.0	5.5	5.0	4.5	4.0	3.5	3.0	2.5	2.0	1.75	1.5	1.25	1.0	0.75	0.50
Tot. inf. depth (mm)	3.08	3.02	0.16	2.87	0.51	2.24	1.92	1.60	1.28	1.12	0.96	0.81	0.65	0.48	0.32
Pass 1 (mm)	2.48	0.42	0.41	0.37	0.34	0.34	0.28	0.27	0.24	0.22	0.22	0.21	0.18	0.16	0.11
2	0.43	0.40	0.39	0.34	0.32	0.31	0.26	0.24	0.22	0.20	0.20	0.17	0.16	0.14	0.09
3	0.35	0.32	0.32	0.28	0.29	0.25	0.21	0.20	0.18	0.17	0.17	0.14	0.12	0.11	0.07
4	0.30	0.28	0.27	0.24	0.22	0.21	0.18	0.17	0.16	0.14	0.14	0.11	0.11	0.07	0.06
5	0.24	0.26	0.24	0.23	0.20	0.19	0.16	0.15	0.14	0.13	0.12	0.10	0.08		
6	0.20	0.24	0.24	0.22	0.18	0.18	0.15	0.15	0.12	0.10	0.08	0.08			
7	0.24	0.21	0.22	0.20	0.17	0.16	0.14	0.12	0.11	0.10					
8	0.23	0.20	0.20	0.18	0.15	0.15	0.13	0.11	0.08	0.08					
9	0.22	0.19	0.19	0.17	0.14	0.14	0.12	0.11							
10	0.19	0.18	0.18	0.16	0.13	0.13	0.11	0.08							
11	0.18	0.17	0.16	0.14	0.12	0.12	0.10								
12	0.16	0.15	0.15	0.13	0.12	0.08	0.08								
13	0.15	0.14	0.12	0.12	0.11										
14	0.13	0.13	0.10	0.10	0.08										
15	0.13	0.12													
16	0.10	0.10													

8. Selection of infeed method, page 25.

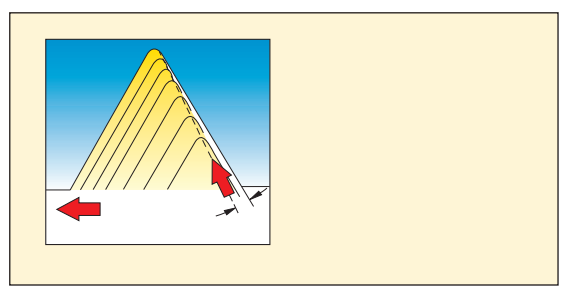

Thread turning – Production methods

The choice of production method is influenced by e.g.

Workpiece
-External or internal thread
-Right or left hand thread
Machine
-Right or left hand tool

Threading towards the chuck

Benefit:
- Best stability
- Originally fitted insert shims can be used for most operations

Note:
- Chip build-up may occur during internal threading, particularly if there is little space between the threading bar and bore of the hole

Right-hand thread – Right-hand tool

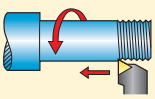

ER

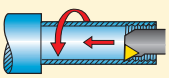

NR

Left-hand thread – Left-hand tool

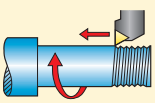

EL

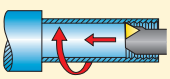

NL

Threading away from the chuck*

Benefit:
- Chip flow is correctly directed during internal threading

Note:
- Secure clamping of the insert and mounting of the toolholder are necessary

Internal threading:
- Use only CNR/L toolholders

Left-hand thread – Right-hand tool

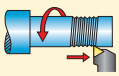

ER

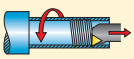

NR

Right-hand thread – Left-hand tool

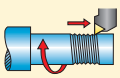

EL

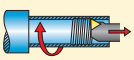

NL

*Notice that the insert shim must be exchanged when threading away from the chuck.

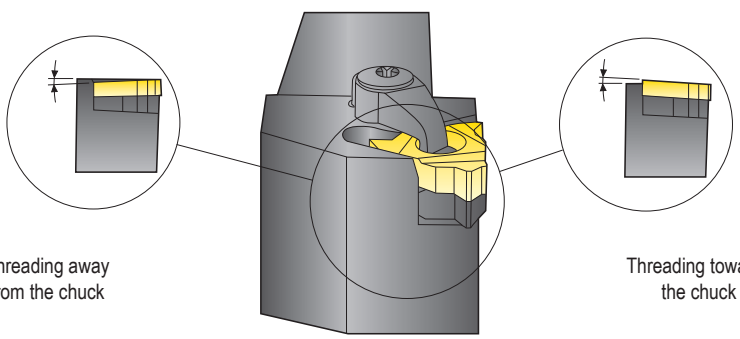

Thread turning – Insert types

For single tooth inserts choose a full profile or partial profile design

Single-tooth insert (Type S) A or Original 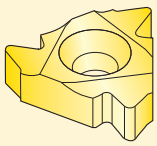 First choice, can be used for applications in a variety of materials.Low cutting forces.	**Single-tooth insert (Type S) A1 chipbreaker** 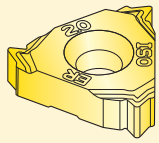 First choice for general applications in steel.	**Single-tooth insert (Type S) A2 chipbreaker** 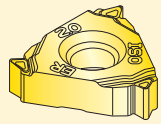 First choice for general applications in stainless steel.
Multi-tooth insert (Type M) 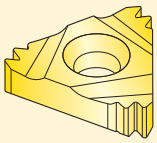 First choice for mass production, since fewer passes are necessary. Only for radial infeed. 2M = 2 teeth version 3M = 3 teeth version	**Multi-tooth insert (TWIN THREADER, TT)** 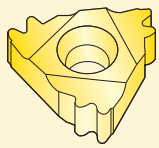 Lower cutting forces than M type. Shorter undercut length than M type. Only for radial infeed. Use insert shim for 2M.	**K insert (Type K)** 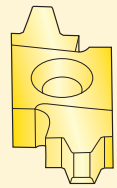 First choice for large/coarse threads.

For single tooth inserts choose a full profile or partial profile design

Full profile 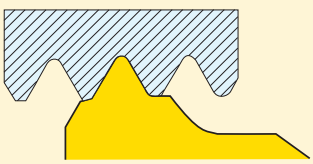 By topping the thread, the workpiece need not be pre-machined to the exact diameter and may be a little oversized. The threading operation is simplified since only one tool is needed for the entire thread (no subsequent deburring is needed).	**Partial profile** 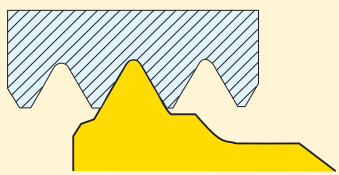 Covers a wide range of thread pitches, which simplifies stock-keeping. Requires a correct workpiece diameter prior to threading. The nose radius of the insert is sized to suit the smallest profile within the pitch range of the insert.

Thread turning – Insert grades

Product strategy grades

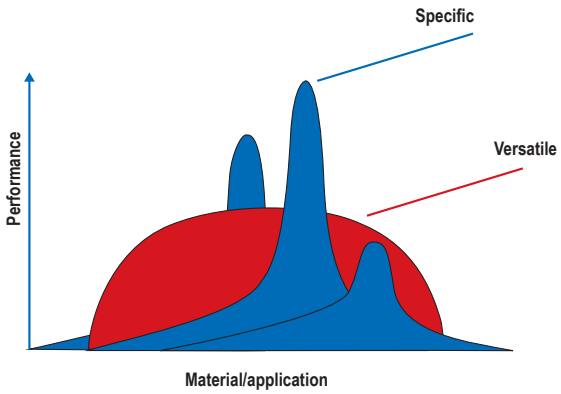

Grade assortment Snap-Tap®

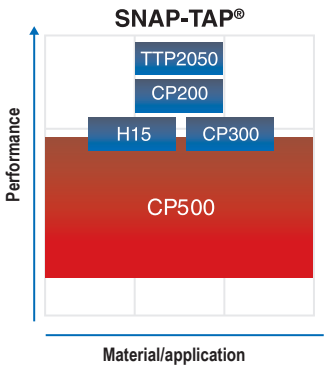

Continuous research and development of better materials, coatings and optimal geometries help fulfil customers requirements. Our product strategy is to provide the market with versatile first choice tools and specific optimized solutions for threading.

Grades

The black areas in the chart indicate a grade's main ISO application groups and the white areas indicate other supplementary application groups.

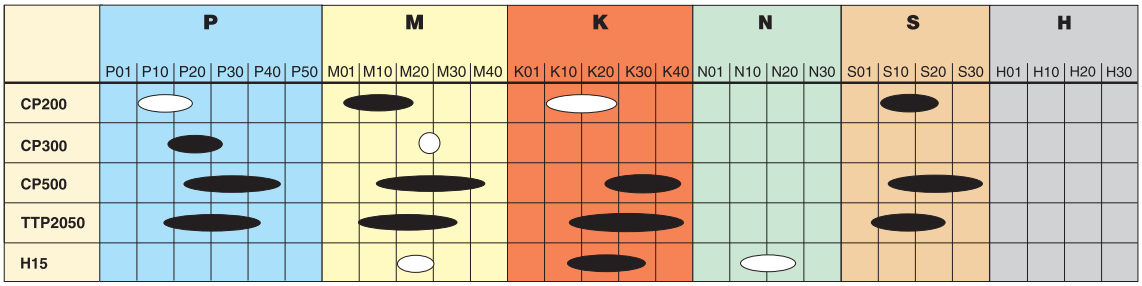

PVD coated grades

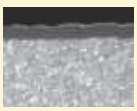	**CP200**	First choice for high-strength steel, martensitic stainless steel, cast iron with low hardness, superalloys and titanium alloys. First choice for high cutting speeds. Hard micrograin with sharp edge, highly resistant to plastic deformation. (Ti,Al)N + TiN
	CP300	Wear-resistant grade which is principally intended for high cutting speeds. Optimizing grade in steel and stainless steel. (Ti,Al)N + TiN
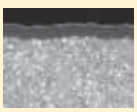	**CP500**	Universal very tough micrograin grade for all types of threading in most materials. Excellent for stainless steel and difficult operations. (Ti,Al)N + TiN
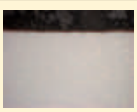	**TTP2050**	Peak performance, wear resistant micrograin grade to be used in steel, stainless steel and cast iron. The nano-laminated coating increases the wear resistance of the grade. (TiAl)N/(TiSi)N

Uncoated grades

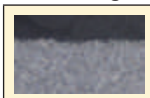	**H15**	First choice for machining normal to hard cast iron. Also suitable for hard steel with a hardness in excess of 350 HB. Micrograin with excellent wear-resistance and sharp edge.

Thread turning – Toolholders

Use the guidelines below to choose a suitable toolholder type.

External threading

Basic choice
Type C (clamp)
Type P (Pin)

CER/L, PER/L

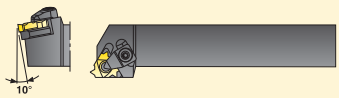

Insert size
16, 20, 22, 26, 27
With insert shim

Cx-CER/L

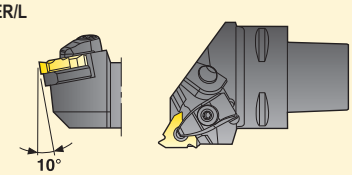

Internal threading

Basic choice
Type C (clamp)
Type P (Pin)

CNR/L, PNR/L

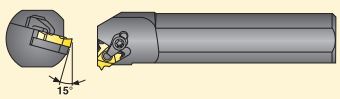

Insert size
16, 20, 22, 26, 27
With insert shim

Cx-CNR/L

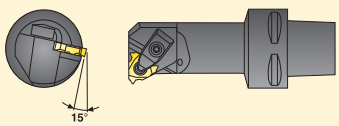

N.B. On 27 mm inserts this angle is 10°

For small holes
Type-S (screw)

SNR/L

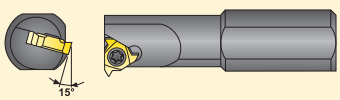

Insert sizes
09,11,16, 22

(No insert shim. To be used only when threading towards the chuck)

Originally fitted insert shims

The table below shows the originally fitted insert shims. These insert shims are suitable for most operations when threading towards the chuck.

Toolholder		Clamp		Screw	Jetstream Tooling®
		External and internal threading		Internal threading	External and internal threading
Insert type		Single-tooth insert (Type S)	Single-tooth insert (Type K)	Single-tooth insert (Type S)	Single-tooth insert (Type S)
Insert shim				No insert shim (λ=2°)	
Insert size	16	GX 16-1			GXA16-1
	20		KX 20-2		
	22	NX22-1			NXA22-1
	26		KX26-2		
	27	VX27-1			VXA27-1

The helix angle can be selected from +5 to -2 by changing the insert shim. The same insert shims are used for both right and left hand holders. The centre height remains constant.

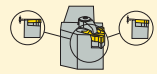

To receive the correct shape on the thread and uniform wear on the insert the cutting edge helix angle (λ) should be equal to the thread lead angle (φ).

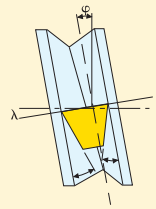

The helix angle (λ) can also be calculated. See page 26 for formulae.

SNR/L toolholders have no exchangeable insert shim and can therefore only be used for threading towards the chuck. The table below shows the available insert shim range.

Insert shim range

Toolholder		Clamp					Jetstream Tooling® Thread Turning		
		External and internal threading					External and internal threading		
Insert type		Multi-tooth insert (Type M)	Single-tooth insert (Type S)		Single-tooth insert (Type K)		Multi-tooth insert (Type M)	Single-tooth insert (Type S)	
Insert shim		Threading towards the chuck	Threading towards the chuck	Threading away from the chuck	Threading towards the chuck	Threading away from the chuck	Threading towards the chuck	Threading towards the chuck	Threading away from the chuck
Insert size	16	MX16-1	GX16-0, -1, -2, -3, -4	GX16-0 -99 -98			MXA16-1	GXA16-0, -1, -2, -3, -4	GXA16-0, -99, -98
	20				KX20-0, -1, -2, -3, -4, -5	KX20-0, -99			
	22	MX22-1	NX22-0, -1, -2, -3, -4	NX22-0 -99 -98			MXA22-1	NXA22-0, -1, -2, -3, -4	NXA22-0, -99, -98
	26				KX26-0, -1, -2, -3, -4, -5	KX26-0, -99			
	27	MX27-1	VX27-0, -1, -2, -3, -4	VX27-0 -99 -98			MXA27-1	VXA22-0, -1, -2, -3, -4	VXA27-0,-99,-98

Thread turning – Insert shim

Choice of insert shim

Use the graph below to choose the correct insert shim.
The graph gives the last digit in the insert shim code.
Example: GX16-1

Production method

Threading towards the chuck, use right side of the graph.
Threading away from the chuck, use left side of the graph.

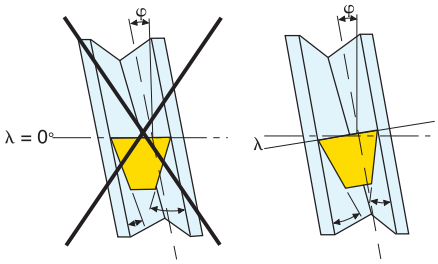

Vertical column - lead

Thread with one start, Lead (Ph) = pitch (P).
Thread with several starts, Lead (Ph) = pitch (P) x number of starts.

Horizontal column = pitch diameter (D_2)

Threading away from the chuck

| | | Pitch diameter D_2 (mm) – threading away from the chuck | | |

Thread turning – Cutting data

In SMG classification of workpiece materials involves a specific material standard in a specific condition assigned as reference for easy and unabiguous adjustment of cutting data for any actual material compared to any Seco reference material. As examples the reference materials EN C45E for SMG P4 and EN 42 CrMo 4 for both SMG P5 and SMG H5 shown below in table 1 where the reference level material property is indicated. (A more complete extract can be found on page(s) 270-273.

SMG	Description	Properties	Reference
P4	Low-alloy general structural steels, 0.25% < C < 0.67%wt Low-alloy Quench & Temper steels	520 < R_m < 1200	C 45E R_m = 660 N/mm^2
P5	Structural steels, 0.25% < C < 0.67%wt Quench & Temper steels	550 < R_m < 1200	42 CrMo 4 R_m = 700 N/mm^2

SMG	Description	Properties	Reference
H5	Quenched & Tempered steels	38 < HRC < 56	42 CrMo 4 50 HRC

Focusing specifically on EN 42 CrMo 4 in annealed condition, the ultimate tensile strength R_m may typically vary between Rm = 630 N/mm^2 and R_m = 780 N/mm^2, which provide a reference level for SMG P5. In Quenched & Tempered condition, the ultimate tensile strength R_m may typically be between R_m = 900 N/mm^2 and R_m = 1100 N/mm^2 thus still belongs to SMG P5. However, if hardened above R_m = 1200 N/mm^2 it instead belongs to SMG H5.

SMG	EN	W.-Nr	AFNOR	BS	UNI	JIS	AISI / ASTM	GOST	Condition	R_{m_nom}	HRC_{nom}
P5	42 CrMo 4	1.1201	42 CD 4	708 M 40	42 CrMo 4	SCM 440 (H)	4142, 4140	38HM	Annealed	700	
	42 CrMo 4	1.1201	42 CD 4	708 M 40	42 CrMo 4	SCM 440 (H)	4142, 4140	38HM	Quenched & Tempered	1000	
H5	42 CrMo 4	1.1201	42 CD 4	708 M 40	42 CrMo 4	SCM 440 (H)	4142, 4140	38HM	Quenched & Tempered		45
	42 CrMo 4	1.1201	42 CD 4	708 M 40	42 CrMo 4	SCM 440 (H)	4142, 4140	38HM	Quenched & Tempered		50

The EN 42CrMo4 quench & tempered steel could be used to illustrate the machinability dependence of materials' condition.

The graphs below indicate how speed recommendations for a nominal material conditions may be adjusted for relative R_m (left diagram valid for ISO-P) and for relative HRC (valid for ISO-H).

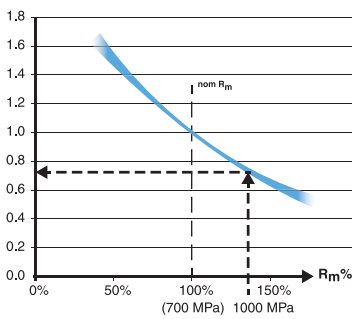

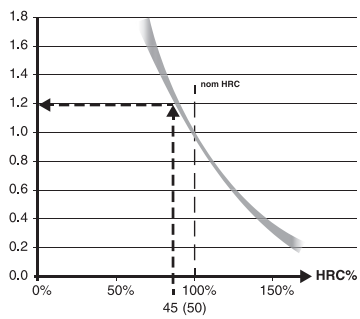

To further illustrate how the SMG P5 nominal v_c can be adjusted to a more accurate recommended v_c we need ultimate tensile strength R_m data and in this case we use the EN 42 CrMo 4 quenched & tempered to R_m = 1000 N/mm^2 according to above table (bold blue arrows).

Assume that we find that the SMG P5 nominal v_c = 280 m/min for a certain product and machining.

Then, actual recommended v_c = 280 m/min x 0,75 = 210 m/min.

Consequently in the SMG H5 the nominal v_c can be adjusted using the hardened EN 42 CrMo 4 at HRC 45 (smaller grey arrows).

Assume that the SMG H5 nominal v_c = 50 m/min for a certain product and machining using a coated cemented carbide tools then, actual recommended v_c = 50 m/min x 1,2 = 60 m/min.

For further workpiece material details please see page(s) 274-281 and suggested cutting data at applicable pages.

For more convenient cutting data handling we recommend applicable tools in My Pages – Suggest on www.secotools.com

Cutting speed

Use the SMG tables to classify the workpiece material. Use the table below to choose cutting speed.

SMG	v_c				
	CP200	CP300	CP500	H15	TTP2050
P1	—	275	205	—	205
P2	—	270	200	—	200
P3	—	230	170	—	170
P4	—	205	150	—	150
P5	—	195	145	—	145
P6	—	220	165	—	165
P7	—	205	155	—	155
P8	—	195	145	—	145
P11	—	200	150	—	150
P12	—	120	90	—	90
M1	150	—	135	100	135
M2	120	—	110	80	110
M3	90	—	85	60	85
M4	70	—	65	—	65
M5	55	—	50	—	50
K1	130	—	120	105	120
K2	110	—	105	95	105
K3	95	—	90	80	90
K4	90	—	85	75	85
K5	55	—	50	—	50
K6	80	—	75	—	75
K7	70	—	65	—	65
N1	—	—	—	255	—
N2	—	—	—	165	—
N3	—	—	—	110	—
N11	—	—	100	150	100
S1	20	—	20	—	20
S2	15	—	15	—	15
S3	15	—	15	—	15
S11	45	—	39	—	39
S12	35	—	30	—	30
S13	27	—	23	—	23

Cutting speeds (v_c) in the table are recommendations for a start value.
Due to machine, material and setup condition it is advisable to optimize cutting data.
Recommended ranges to use for each grade is CP200, CP300, CP500, TTP2050 and H15 +/-15%

SMG=Seco Material Group
v_c = Cutting speed (m/min)

Note that there is a fixed relationship between rotational speed and feed rate in threading.
Check that the chosen cutting speed does not result in a too high feed speed.

Number of passes and infeed depths

A thread cannot be made in one cut because of the relatively brittle cutting edge. The total cutting depth must be divided into several passes. Those passes should all have similar cutting forces (equal chip areas), see figures.

Use the tables on page 20-24 to find recommendations for number of passes and infeed depths. The tables give basic recommendations and are applicable on all geometries - Original, A, A1 and A2.

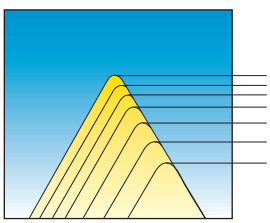

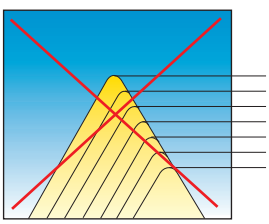

- The infeed series given is based on a good control of the OD/ID tolerances for the selected profile.
- If insert fracture should occur, the number of passes should be increased.
- The infeed depth should not be less than 0,05 mm/pass.
- On stainless steel, the infeed depth per pass should be greater than 0,08 mm.
- The recommendations can also be used for part-profile inserts. The number of passes should then, in most cases, be increased.
- The threading insert nose radius is relatively small and can easily be damaged if it is overloaded.

Seco Suggest or Threading Wizard™

In order to simplify the selection of tools and cutting parameters Seco Tools introduce Suggest which eliminates complicated searching, programming and calculation. The Threading Wizard eliminate complicated programming and calculations. The Threading Wizard is free and available at https://www.secotools.com/#dashboard under applications Suggest https://www.secotools.com/#dashboard/Suggest/Suggest or Threading Wizard https://www.secotools.com/#dashboard/Portal/ThreadingWizard.

Cutting speed – MDT

Use the SMG tables to classify the workpiece material. Use the table below to choose cutting speed.

SMG	v_c CP500
P1	155
P2	150
P3	130
P4	115
P5	110
P6	125
P7	115
P8	110
P11	115
P12	65
M1	135
M2	110
M3	85
M4	65
M5	50
K1	130
K2	110
K3	95
K4	90
K5	55
K6	80
K7	70
N1	—
N2	—
N3	—
N11	85
S1	21
S2	17
S3	15
S11	—
S12	—
S13	—

SMG = Seco Material Group
v_c = m/min
Cutting speeds (v_c) in the table are recommendations for a start value.
Due to machine, material and setup condition it is advisable to optimize cutting data. Recommended ranges to use for CP500 +/-15%

Cutting speed – Mini Shaft

Use the SMG tables to classify the workpiece material. Use the table below to choose cutting speed.

SMG	v_c CP500
P1	155
P2	150
P3	130
P4	115
P5	110
P6	125
P7	115
P8	110
P11	115
P12	65
M1	80
M2	65
M3	50
M4	37
M5	31
K1	150
K2	130
K3	110
K4	105
K5	60
K6	90
K7	80
N1	—
N2	—
N3	—
N11	95
S1	19
S2	15
S3	13

SMG = Seco Material Group
v_c = m/min
Cutting speeds (v_c) in the table are recommendations for a start value.
Due to machine, material and setup condition it is advisable to optimize cutting data. Recommended ranges to use for CP500 +/-15%

Number of passes and infeed depths

External ISO-metric threads

Ph	6.0	5.5	5.0	4.5	4.0	3.5	3.0	2.5	2.0	1.75	1.5	1.25	1.0	0.80	0.75	0.50
a_p	3,82	3,52	3,19	2,87	2,53	2,23	1,92	1,60	1,25	1,13	0,93	0,81	0,65	0,52	0,48	0,33
1	0,46	0,43	0,41	0,37	0,34	0,34	0,28	0,27	0,24	0,22	0,22	0,21	0,18	0,17	0,16	0,11
2	0,43	0,40	0,39	0,34	0,32	0,31	0,26	0,24	0,22	0,20	0,20	0,17	0,16	0,15	0,14	0,09
3	0,35	0,32	0,32	0,28	0,25	0,25	0,21	0,20	0,18	0,17	0,17	0,14	0,12	0,12	0,11	0,07
4	0,30	0,28	0,27	0,24	0,22	0,21	0,18	0,17	0,16	0,14	0,14	0,11	0,11	0,08	0,07	0,06
5	0,29	0,26	0,24	0,22	0,20	0,18	0,16	0,15	0,14	0,12	0,12	0,10	0,08	–	–	–
6	0,26	0,24	0,24	0,22	0,18	0,18	0,15	0,15	0,12	0,10	0,08	0,08	–	–	–	–
7	0,24	0,21	0,22	0,20	0,17	0,16	0,14	0,12	0,11	0,10	–	–	–	–	–	–
8	0,23	0,20	0,20	0,18	0,15	0,15	0,13	0,11	0,08	0,08	–	–	–	–	–	–
9	0,22	0,19	0,19	0,17	0,14	0,14	0,12	0,11	–	–	–	–	–	–	–	–
10	0,19	0,18	0,18	0,16	0,13	0,12	0,11	0,08	–	–	–	–	–	–	–	–
11	0,18	0,17	0,16	0,14	0,12	0,11	0,10	–	–	–	–	–	–	–	–	–
12	0,16	0,15	0,15	0,13	0,12	0,08	0,08	–	–	–	–	–	–	–	–	–
13	0,15	0,14	0,12	0,12	0,11	–	–	–	–	–	–	–	–	–	–	–
14	0,13	0,13	0,10	0,10	0,08	–	–	–	–	–	–	–	–	–	–	–
15	0,13	0,12	–	–	–	–	–	–	–	–	–	–	–	–	–	–
16	0,10	0,10	–	–	–	–	–	–	–	–	–	–	–	–	–	–

Internal ISO-metric threads

Ph	6.0	5.5	5.0	4.5	4.0	3.5	3.0	2.5	2.0	1.75	1.5	1.25	1.0	0.80	0.75	0.50
a_p	3,54	3,25	2,96	2,65	2,33	2,05	1,78	1,48	1,17	1,05	0,85	0,75	0,60	0,49	0,46	0,31
1	0,46	0,43	0,42	0,37	0,34	0,32	0,28	0,26	0,23	0,22	0,20	0,17	0,17	0,17	0,16	0,10
2	0,43	0,40	0,40	0,34	0,31	0,30	0,26	0,25	0,21	0,20	0,18	0,17	0,15	0,14	0,13	0,08
3	0,35	0,33	0,32	0,28	0,24	0,24	0,21	0,18	0,17	0,15	0,15	0,14	0,11	0,11	0,10	0,07
4	0,30	0,26	0,26	0,23	0,21	0,19	0,16	0,15	0,15	0,13	0,13	0,10	0,09	0,07	0,07	0,06
5	0,26	0,22	0,22	0,21	0,18	0,17	0,14	0,13	0,12	0,10	0,11	0,09	0,08	-	-	-
6	0,22	0,20	0,20	0,19	0,15	0,15	0,13	0,12	0,11	0,09	0,08	0,08	-	-	-	-
7	0,20	0,18	0,17	0,16	0,14	0,14	0,12	0,11	0,10	0,08	-	-	-	-	-	-
8	0,19	0,17	0,16	0,15	0,13	0,13	0,11	0,10	0,08	0,08	-	-	-	-	-	-
9	0,18	0,16	0,16	0,14	0,12	0,12	0,10	0,10	-	-	-	-	-	-	-	-
10	0,16	0,15	0,15	0,13	0,12	0,11	0,10	0,08	-	-	-	-	-	-	-	-
11	0,15	0,14	0,14	0,12	0,11	0,10	0,09	-	-	-	-	-	-	-	-	-
12	0,15	0,14	0,14	0,12	0,10	0,08	0,08	-	-	-	-	-	-	-	-	-
13	0,14	0,13	0,12	0,11	0,10	-	-	-	-	-	-	-	-	-	-	-
14	0,13	0,12	0,10	0,10	0,08	-	-	-	-	-	-	-	-	-		-
15	0,12	0,12	-	-	-	-	-	-	-	-	-	-	-	-	-	-
16	0,10	0,10	-	-	-	-	-	-	-	-	-	-	-	-	-	-

External/Internal Whitworth threads

TPI	4.0	4.5	5	6	7	8	9	10	11	12	14	16	18	19	20	26	28
a_p	4,29	3,82	3,44	2,90	2,50	2,17	1,93	1,76	1,58	1,45	1,20	1,13	1,01	0,96	0,92	0,72	0,69
1	0,49	0,46	0,45	0,38	0,37	0,32	0,30	0,29	0,28	0,28	0,24	0,24	0,23	0,22	0,21	0,19	0,18
2	0,46	0,43	0,43	0,36	0,35	0,30	0,28	0,27	0,26	0,26	0,22	0,22	0,22	0,22	0,21	0,18	0,17
3	0,38	0,38	0,38	0,30	0,29	0,24	0,23	0,22	0,22	0,22	0,18	0,19	0,19	0,18	0,17	0,15	0,14
4	0,36	0,33	0,32	0,26	0,25	0,21	0,20	0,19	0,19	0,18	0,15	0,16	0,16	0,14	0,14	0,12	0,12
5	0,34	0,29	0,28	0,22	0,22	0,19	0,18	0,17	0,16	0,16	0,13	0,13	0,13	0,12	0,11	0,08	0,08
6	0,31	0,25	0,25	0,21	0,19	0,17	0,15	0,15	0,14	0,14	0,11	0,11	0,08	0,08	0,08	-	-
7	0,29	0,24	0,22	0,19	0,18	0,15	0,14	0,14	0,13	0,13	0,09	0,08	-	-	-	-	-
8	0,27	0,22	0,20	0,17	0,16	0,14	0,13	0,13	0,12	0,08	0,08	-	-	-	-	-	-
9	0,24	0,20	0,19	0,16	0,15	0,13	0,12	0,12	0,08	-	-	-	-	-	-	-	-
10	0,22	0,18	0,18	0,15	0,14	0,12	0,12	0,08	-	-	-	-	-	-	-	-	-
11	0,20	0,17	0,17	0,14	0,12	0,12	0,08	-	-	-	-	-	-	-	-	-	-
12	0,19	0,16	0,15	0,14	0,08	0,08	-	-	-	-	-	-	-	-	-	-	-
13	0,17	0,15	0,12	0,12	-	-	-	-	-	-	-	-	-	-	-	-	-
14	0,15	0,14	0,10	0,10	-	-	-	-	-	-	-	-	-	-	-	-	-
15	0,12	0,12	-	-	-	-	-	-	-	-	-	-	-	-	-	-	-
16	0,10	0,10	-	-	-	-	-	-	-	-	-	-	-	-	-	-	-

Ph = Lead (mm)
a_p = Total infeed depth (mm)
TPI = Threads per inch
Recommendations are for steel with a hardness < 300 HB

Number of passes and infeed depths

External UN threads

TPI	4.0	4.5	5	6	7	8	9	10	11	12	13	14	16	18	20	24	28	32
a_p	4,07	3,62	3,29	2,71	2,33	2,08	1,84	1,66	1,52	1,39	1,29	1,19	1,05	0,94	0,84	0,70	0,60	0,53
1	0,47	0,45	0,43	0,36	0,35	0,30	0,28	0,27	0,27	0,27	0,25	0,23	0,22	0,23	0,20	0,19	0,17	0,17
2	0,44	0,41	0,40	0,34	0,33	0,28	0,26	0,26	0,25	0,26	0,24	0,22	0,21	0,21	0,19	0,17	0,15	0,15
3	0,40	0,39	0,36	0,27	0,26	0,25	0,21	0,20	0,20	0,20	0,18	0,17	0,16	0,16	0,15	0,14	0,11	0,13
4	0,36	0,31	0,31	0,23	0,22	0,21	0,20	0,17	0,19	0,18	0,17	0,15	0,14	0,14	0,12	0,12	0,09	0,08
5	0,32	0,26	0,26	0,22	0,21	0,18	0,17	0,16	0,16	0,15	0,14	0,13	0,13	0,12	0,10	0,08	0,08	-
6	0,27	0,23	0,23	0,20	0,19	0,16	0,15	0,15	0,14	0,13	0,12	0,11	0,11	0,08	0,08	-	-	-
7	0,25	0,21	0,20	0,18	0,17	0,14	0,14	0,14	0,12	0,12	0,11	0,10	0,08	-	-	-	-	-
8	0,23	0,20	0,19	0,16	0,15	0,13	0,12	0,12	0,11	0,08	0,08	0,08	-	-	-	-	-	-
9	0,22	0,18	0,19	0,15	0,14	0,12	0,12	0,11	0,08	-	-	-	-	-	-	-	-	-
10	0,21	0,17	0,18	0,14	0,12	0,12	0,11	0,08	-	-	-	-	-	-	-	-	-	-
11	0,19	0,16	0,17	0,13	0,11	0,11	0,08	-	-	-	-	-	-	-	-	-	-	-
12	0,18	0,15	0,15	0,12	0,08	0,08	-	-	-	-	-	-	-	-	-	-	-	-
13	0,16	0,14	0,12	0,11	-	-	-	-	-	-	-	-	-	-	-	-	-	-
14	0,15	0,14	0,10	0,10	-	-	-	-	-	-	-	-	-	-	-	-	-	-
15	0,12	0,12	-	-	-	-	-	-	-	-	-	-	-	-	-	-	-	-
16	0,10	0,10	-	-	-	-	-	-	-	-	-	-	-	-	-	-	-	-

Internal UN threads

TPI	4	4.5	5	6	7	8	9	10	11	12	13	14	16	18	20	24	28	32
a_p	3,74	3,32	2,99	2,46	2,13	1,88	1,66	1,49	1,36	1,25	1,14	1,06	0,93	0,84	0,76	0,64	0,56	0,49
1	0,44	0,41	0,42	0,35	0,34	0,30	0,28	0,27	0,27	0,27	0,25	0,23	0,22	0,23	0,20	0,18	0,17	0,17
2	0,41	0,38	0,38	0,33	0,32	0,28	0,26	0,25	0,23	0,23	0,20	0,18	0,18	0,17	0,16	0,15	0,14	0,14
3	0,39	0,34	0,33	0,25	0,24	0,22	0,19	0,18	0,18	0,18	0,15	0,14	0,14	0,14	0,13	0,13	0,09	0,10
4	0,33	0,28	0,27	0,21	0,21	0,18	0,16	0,15	0,15	0,15	0,13	0,13	0,12	0,12	0,10	0,10	0,08	0,08
5	0,28	0,23	0,23	0,18	0,17	0,15	0,14	0,13	0,13	0,13	0,12	0,11	0,10	0,10	0,09	0,08	0,08	-
6	0,24	0,20	0,20	0,16	0,15	0,13	0,13	0,12	0,11	0,11	0,11	0,10	0,09	0,08	0,08	-	-	-
7	0,22	0,19	0,18	0,15	0,14	0,12	0,12	0,11	0,11	0,10	0,10	0,09	0,08	-	-	-	-	-
8	0,21	0,18	0,17	0,14	0,13	0,11	0,11	0,10	0,10	0,08	0,08	0,08	-	-	-	-	-	-
9	0,20	0,17	0,16	0,13	0,12	0,11	0,10	0,10	0,08	-	-	-	-	-	-	-	-	-
10	0,18	0,16	0,15	0,12	0,12	0,10	0,09	0,08	-	-	-	-	-	-	-	-	-	-
11	0,17	0,15	0,14	0,12	0,11	0,10	0,08	-	-	-	-	-	-	-	-	-	-	-
12	0,16	0,14	0,14	0,11	0,08	0,08	-	-	-	-	-	-	-	-	-	-	-	-
13	0,15	0,14	0,12	0,11	-	-	-	-	-	-	-	-	-	-	-	-	-	-
14	0,14	0,13	0,10	0,10	-	-	-	-	-	-	-	-	-	-	-	-	-	-
15	0,12	0,12	-	-	-	-	-	-	-	-	-	-	-	-	-	-	-	-
16	0,10	0,10	-	-	-	-	-	-	-	-	-	-	-	-	-	-	-	-

External multi-tooth inserts

	ISO Metric						UN					Whitworth		NPT		
Type	3M	2M	3M	2M	3M	2M	2M	3M	2M	3M	2M	2M		2M	3M	2M
Ph (mm)	1,0	1,5	1,5	2,0	2,0	3,0	–	–	–	–	–	–		–	–	–
TPI	–	–	–	–	–	–	16	16	12	12	8	11		11,5	11,5	8
a_p (mm)	0,65	0,93	0,93	1,25	1,25	1,92	1,05	1,05	1,39	1,39	2,08	1,58		1,76	1,76	2,54
Pass 1 (mm)	0,36	0,43	0,56	0,57	0,75	0,65	0,49	0,64	0,64	0,84	0,70	0,73		0,59	0,81	0,88
2	0,29	0,30	0,37	0,40	0,50	0,53	0,33	0,41	0,44	0,55	0,57	0,50		0,50	0,57	0,64
3	–	0,20	–	0,28	–	0,42	0,23	–	0,31	–	0,46	0,35		0,37	0,38	0,57
4	–	–	–	–	–	0,32	–	–	–	–	0,35	–		0,30	–	0,45

Internal multi-tooth inserts

	ISO Metric						UN					Whitworth		NPT		
Type	3M	2M	3M	2M	3M	2M	2M	3M	2M	3M	2M	2M		2M	3M	2M
Ph (mm)	1,0	1,5	1,5	2,0	2,0	3,0	–	–	–	–	–	–		–	–	–
TPI	–	–	–	–	–	–	16	16	12	12	8	11		11,5	11,5	8
a_p (mm)	0,60	0,85	0,85	1,17	1,17	1,78	0,93	0,93	1,25	1,25	1,88	1,58		1,76	1,76	2,54
Pass 1 (mm)	0,33	0,38	0,51	0,51	0,70	0,55	0,42	0,56	0,56	0,75	0,58	0,73		0,59	0,81	0,88
2	0,27	0,27	0,34	0,38	0,47	0,49	0,30	0,37	0,40	0,50	0,51	0,50		0,50	0,57	0,64
3	–	0,20	–	0,28	–	0,42	0,21	–	0,29	–	0,44	0,35		0,37	0,38	0,57
4	–	–	–	–	–	0,32	–	–	–	–	0,35	–		0,30	–	0,45

Number of passes and infeed depths

External/Internal NPT threads

TPI	8	11,5	14	18	27
a_p	2,54	1,76	1,45	1,12	0,75
1	0,28	0,25	0,24	0,22	0,19
2	0,25	0,22	0,22	0,18	0,15
3	0,22	0,18	0,17	0,15	0,13
4	0,19	0,16	0,15	0,14	0,11
5	0,18	0,16	0,14	0,13	0,09
6	0,18	0,14	0,13	0,12	0,08
7	0,17	0,14	0,12	0,10	-
8	0,17	0,12	0,10	0,08	-
9	0,16	0,12	0,10	-	-
10	0,16	0,10	0,08	-	-
11	0,14	0,09	-	-	-
12	0,13	0,08	-	-	-
13	0,12	-	-	-	-
14	0,11	-	-	-	-
15	0,08	-	-	-	-

External Round DIN 405

TPI	4	6	8	10
a_p	3,43	2,23	1,73	1,40
1	0,44	0,33	0,29	0,26
2	0,40	0,29	0,26	0,25
3	0,34	0,25	0,21	0,23
4	0,32	0,23	0,19	0,20
5	0,28	0,20	0,18	0,16
6	0,26	0,18	0,16	0,12
7	0,24	0,16	0,14	0,10
8	0,22	0,15	0,12	0,08
9	0,20	0,14	0,10	–
10	0,19	0,12	0,08	–
11	0,17	0,10	–	–
12	0,15	0,08	–	–
13	0,12	–	–	–
14	0,10	–	–	–

Internal Round DIN 405

TPI	4	6	8	10
a_p	3,59	2,44	1,66	1,49
1	0,46	0,38	0,26	0,27
2	0,43	0,34	0,22	0,26
3	0,40	0,30	0,21	0,25
4	0,35	0,25	0,19	0,22
5	0,30	0,21	0,18	0,18
6	0,26	0,19	0,16	0,13
7	0,24	0,17	0,14	0,10
8	0,22	0,16	0,12	0,08
9	0,20	0,14	0,10	–
10	0,19	0,12	0,08	–
11	0,17	0,10	–	–
12	0,15	0,08	–	–
13	0,12	–	–	–
14	0,10	–	–	–

TPI = Threads per Inch
a_p = Total infeed depth (mm)
Recommendations are for steel with a hardness < 300 HB

Number of passes and infeed depths

External TR thread

Ph	14.0	12.0	10.0	9.0	8.0	7.0	6.0	5.0	4.0	3.0	2.0	1.5
a_p	8,2	6,72	5,7	5,16	4,68	4,17	3,66	2,89	2,38	1,83	1,33	0,97
1	0,40	0,38	0,38	0,38	0,37	0,37	0,37	0,34	0,31	0,27	0,25	0,23
2	0,37	0,36	0,36	0,35	0,35	0,34	0,35	0,33	0,28	0,25	0,24	0,22
3	0,36	0,34	0,34	0,34	0,34	0,33	0,32	0,27	0,24	0,21	0,20	0,18
4	0,36	0,34	0,34	0,33	0,33	0,31	0,29	0,25	0,20	0,17	0,17	0,14
5	0,35	0,32	0,32	0,31	0,31	0,29	0,27	0,23	0,19	0,15	0,14	0,12
6	0,35	0,32	0,32	0,30	0,29	0,26	0,25	0,21	0,18	0,13	0,13	0,08
7	0,34	0,30	0,31	0,29	0,28	0,26	0,23	0,20	0,16	0,13	0,11	–
8	0,34	0,30	0,29	0,28	0,27	0,26	0,22	0,20	0,15	0,12	0,09	–
9	0,34	0,30	0,28	0,26	0,25	0,24	0,22	0,18	0,15	0,12	–	–
10	0,33	0,29	0,27	0,25	0,24	0,23	0,20	0,16	0,15	0,10	–	–
11	0,33	0,29	0,25	0,24	0,23	0,22	0,18	0,15	0,14	0,10	–	–
12	0,32	0,29	0,24	0,23	0,21	0,22	0,17	0,14	0,13	0,08	–	–
13	0,32	0,28	0,23	0,22	0,20	0,20	0,17	0,13	0,10	–	–	–
14	0,31	0,27	0,22	0,21	0,19	0,19	0,16	0,10	–	–	–	–
15	0,31	0,25	0,22	0,21	0,19	0,17	0,14	–	–	–	–	–
16	0,30	0,25	0,20	0,19	0,18	0,16	0,12	–	–	–	–	–
17	0,30	0,24	0,19	0,18	0,17	0,12	–	–	–	–	–	–
18	0,29	0,22	0,18	0,16	0,15	–	–	–	–	–	–	–
19	0,28	0,20	0,17	0,15	0,13	–	–	–	–	–	–	–
20	0,27	0,20	0,16	0,15	–	–	–	–	–	–	–	–
21	0,23	0,19	0,15	0,13	–	–	–	–	–	–	–	–
22	0,23	0,18	0,15	–	–	–	–	–	–	–	–	–
23	0,21	0,17	0,13	–	–	–	–	–	–	–	–	–
24	0,19	0,16	–	–	–	–	–	–	–	–	–	–
25	0,17	0,15	–	–	–	–	–	–	–	–	–	–
26	0,16	0,13	–	–	–	–	–	–	–	–	–	–
27	0,16	–	–	–	–	–	–	–	–	–	–	–
28	0,15	–	–	–	–	–	–	–	–	–	–	–
29	0,13	–	–	–	–	–	–	–	–	–	–	–

Internal TR threads

Ph	14.0	12.0	10.0	9.0	8.0	7.0	6.0	5.0	4.0	3.0	2.0	1.5
a_p	8,47	6,71	5,7	5,19	4,68	4,17	3,65	2,89	2,38	1,85	1,34	0,98
1	0,40	0,38	0,38	0,38	0,37	0,37	0,37	0,34	0,31	0,27	0,25	0,23
2	0,37	0,36	0,36	0,35	0,35	0,34	0,34	0,33	0,28	0,25	0,24	0,22
3	0,36	0,34	0,34	0,34	0,34	0,33	0,32	0,27	0,24	0,22	0,21	0,19
4	0,36	0,34	0,34	0,33	0,33	0,31	0,29	0,25	0,20	0,17	0,17	0,14
5	0,35	0,32	0,32	0,31	0,31	0,29	0,27	0,23	0,19	0,15	0,14	0,12
6	0,35	0,32	0,32	0,31	0,29	0,26	0,25	0,21	0,18	0,14	0,13	0,08
7	0,34	0,30	0,31	0,29	0,28	0,26	0,23	0,20	0,16	0,13	0,11	–
8	0,34	0,30	0,29	0,29	0,27	0,26	0,22	0,20	0,15	0,12	0,09	–
9	0,34	0,30	0,28	0,26	0,25	0,24	0,22	0,18	0,15	0,12	–	–
10	0,33	0,29	0,27	0,25	0,24	0,23	0,20	0,16	0,15	0,10	–	–
11	0,33	0,29	0,25	0,24	0,23	0,22	0,18	0,15	0,14	0,10	–	–
12	0,32	0,28	0,24	0,23	0,21	0,22	0,17	0,14	0,13	0,08	–	–
13	0,32	0,28	0,23	0,22	0,20	0,20	0,17	0,13	0,10	–	–	–
14	0,31	0,27	0,22	0,21	0,19	0,19	0,16	0,10	–	–	–	–
15	0,31	0,25	0,22	0,21	0,19	0,17	0,14	–	–	–	–	–
16	0,30	0,25	0,20	0,19	0,18	0,16	0,12	–	–	–	–	–
17	0,30	0,24	0,19	0,18	0,17	0,12	–	–	–	–	–	–
18	0,29	0,22	0,18	0,16	0,15	–	–	–	–	–	–	–
19	0,28	0,20	0,17	0,15	0,13	–	–	–	–	–	–	–
20	0,27	0,20	0,16	0,15	–	–	–	–	–	–	–	–
21	0,23	0,19	0,15	0,13	–	–	–	–	–	–	–	–
22	0,23	0,18	0,15	–	–	–	–	–	–	–	–	–
23	0,21	0,17	0,13	–	–	–	–	–	–	–	–	–
24	0,19	0,16	–	–	–	–	–	–	–	–	–	–
25	0,17	0,15	–	–	–	–	–	–	–	–	–	–
26	0,16	0,13	–	–	–	–	–	–	–	–	–	–
27	0,16	–	–	–	–	–	–	–	–	–	–	–
28	0,15	–	–	–	–	–	–	–	–	–	–	–
29	0,13	–	–	–	–	–	–	–	–	–	–	–
30	0,13	–	–	–	–	–	–	–	–	–	–	–

a_p = Total infeed depth (mm) Recommendations are for steel with a hardness < 300 HB

Number of passes and infeed depths, multi-tooth insert TWIN THREADER, TT

External 60° threads.

Ph (mm)	2.0	1.5	1.0
a_p (mm)	1,25	0,93	0,65
Pass 1 (mm)	0,25	0,22	0,22
2	0,36	0,31	0,25
3	0,25	0,22	0,18
4	0,21	0,18	–
5	0,18	–	–

Internal 60° threads

Ph (mm)	2.0	1.5	1.0
a_p (mm)	1,17	0,85	0,60
Pass 1 (mm)	0,23	0,20	0,19
2	0,34	0,27	0,23
3	0,23	0,20	0,18
4	0,19	0,18	–
5	0,18	–	–

External and internal Whitworth and BSPT threads

TPI	11	14
a_p (mm)	1,58	1,20
Pass 1 (mm)	0,26	0,22
2	0,38	0,35
3	0,27	0,24
4	0,25	0,21
5	0,22	0,18
6	0,20	–

External UN threads

TPI	12	16
a_p (mm)	1,39	1,05
Pass 1 (mm)	0,28	0,25
2	0,38	0,36
3	0,28	0,26
4	0,25	0,18
5	0,20	–

Internal UN threads

TPI	12	16
a_p (mm)	1,25	0,93
Pass 1 (mm)	0,24	0,21
2	0,35	0,32
3	0,25	0,22
4	0,22	0,18
5	0,19	–

Infeed method

The choice of infeed method is most important for long chipping materials to ensure good chip control.

Modified flank infeed

For CNC machines and conventional machines

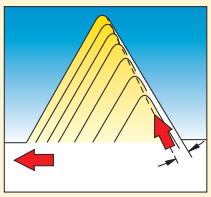

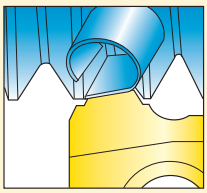

First choice for CNC machines
The infeed angle should be 2,5–5% less than the flank angle

- Good chip control (important for internal threading)
- Good surface finish on thread
- Long tool life

Flank infeed

For CNC machines and conventional machines

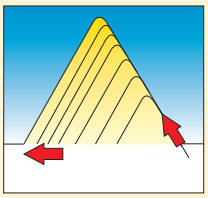

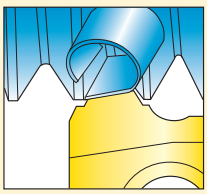

Choose flank infeed when modified flank infeed cannot be used

- Good chip control
- Can result in bad surface on thread
- Not suitable for work hardening materials

Radial infeed

For conventional machines and multi-tooth inserts

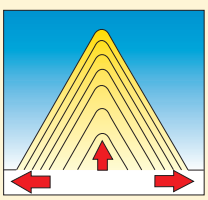

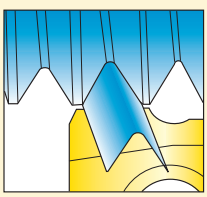

Multitooth inserts demand radial infeed
First choice for work hardening materials

- Difficult to control the chip
- High cutting forces

Alternate flank infeed

For CNC machines

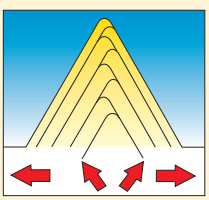

First choice for large coarse threads

- Long tool life
- Chipbreaking problems can arise

Nomenclature and formulae

RPM

$$n = \frac{v_c \cdot 1000}{\pi \cdot D_c} \quad \text{(rev/min)}$$

Cutting speed

$$v_c = \frac{n \cdot \pi \cdot D_c}{1000} \quad \text{(m/min)}$$

Slide velocity/ feed rate

$$v_f = \frac{n \cdot P_h}{1000} \quad \text{(m/min)}$$

Lead

$$P_h = P \cdot \text{numbers of starts} \quad \text{(mm)}$$

Helix angle

$$\lambda = \arctan \frac{P_h}{D_2 \cdot \pi} \quad (°)$$

Conversion of P to TPI

$$TPI = \frac{25{,}4}{P}$$

D_c = Workpiece diameter (mm)

D_2 = Pitch diameter (mean diameter) (mm)

n = RPM (rev/min)

P = Pitch (mm)

P_h = Lead (mm)

v_f = Slide velocity (feed rate) (m/min)

TPI = Number of threads per inch

v_c = Cutting speed (m/min)

λ = Helix angle (°)

Thread turning – Toolholder modifications to thread small ID

It is often necessary to cut internal threads which are too small to be made with a standard toolholder.

Several standard internal toolholders can be modified by a simple reworking so that threads can be cut in approximately 30% smaller bores. This modification work can be made on an lathe with a four-jaw chuck. In the dimension table D_m min* at pages 'Toolholders Internal' you will find the dimensions required for the alteration.

On demand, these internal toolholders can also be supplied as special design.

For some holders it is possible to work inside smaller bores than indicated by the Dm mod dimension, here it is necessary "to back off" the bottom corner of the insert (possibly also the insert shim).

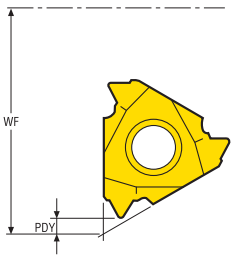

WF and PDY dimensions can be found on the pages for internal toolholders (pages 55-59) and threading inserts (pages 91-123).

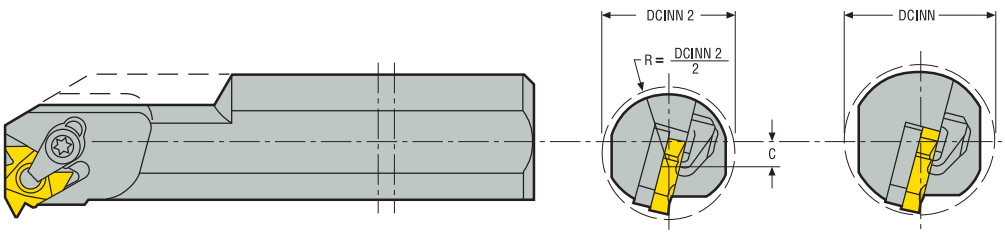

C = WF – PDY + R – DCINN2

C = Centre-point displacement when modifying the tool.
DCINN = Minimum bore diameter of standard tool.
DCINN2 = Minimum bore diameter with a modified tool.

Troubleshooting

Rapid flank wear

- Reduce the cutting speed
- Increase the infeed per pass
- Use modified flank infeed
- Check that the correct insert shim has been selected
- Select a more wear-resistant grade

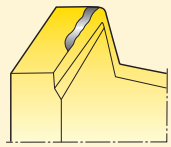

Insert fracture

- Increase the number of passes
- Check the workpiece mounting
- Check the centre height of the cutting edge
- Check for built-up edge
- Select a tougher grade

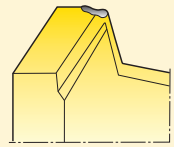

Plastic deformation

- Select a grade with better resistance to plastic deformation
- Reduce the cutting speed
- Increase the number of passes
- Increase the coolant supply
- Check that the workpiece diameter is correct prior to cutting the thread

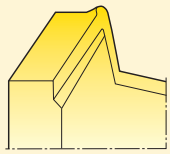

Vibrations

- Change the cutting speed
- Reduce the overhang and use the most stable toolholder
- Check the centre height of the cutting edge
- Check that the workpiece diameter is correct

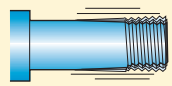

Build-up edge

- Increase the cutting speed
- Do not use coolant

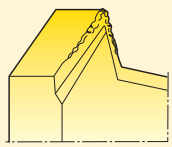

Poor finish

- Increase the cutting speed
- Check that the correct insert shim has been selected
- Use modified flank infeed or radial infeed

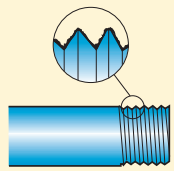

Edge chipping

- Check the workpiece mounting
- Check the cutting speed
- Use modified flank infeed
- Select a tougher grade

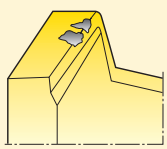

Poor chip control

- Reduce the number of passes
- Increase the cutting speed
- Use modified flank infeed
- Increase the coolant supply

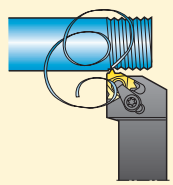

Optimisation

ISO-P (steel)

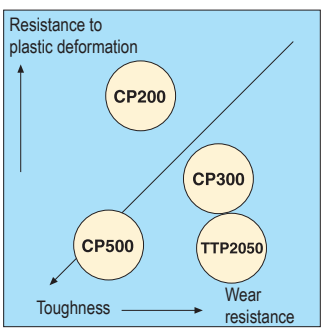

ISO-M (stainless steel)

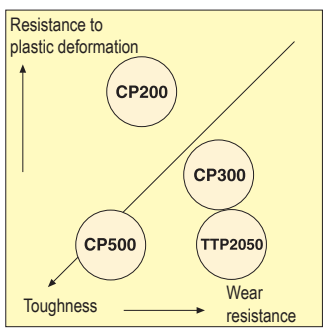

ISO-K (cast iron)

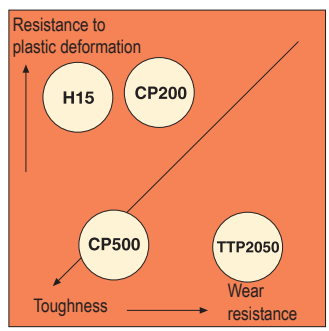

Torque values for clamping screws

Maximum Torque value for each screw is shown below

Screw designation	Torque Nm	Torque key
110.26-655	10,0	H00T-60100
117.26-655	5,0	H00T-3050
117.26-657	3,0	H00-2530
170.26-655	6,0	H00T-4060
C02205-T07P	0,9	T00-07P09
C02505-T07P	0,9	T00-07P09
C02506-T07P	0,9	T00-07P09
C03007-T09P	2,0	T00-09P20
C03508-T15P	3,0	T00-15P30
C03509-T15P	3,0	T00-15P30
C03510-T15P	3,0	T00-15P30
C03511-T09P	2,0	T00-09P20
C03512-T15P	3,0	T00-15P30
C04008-T15P	3,5	T00-15P35
C04010-T15P	3,5	T00-15P35
C04011-T15P	3,5	T00-15P35
C04014-T15P	3,5	T00-15P35
C04512-T15P	5,0	T00-15P50
C04518-T15P	5,0	T00-15P50
C05010-T20P	5,0	T00-20P50
C05012-T15P	5,0	T00-15P50
C05013-T20P	5,0	T00-20P50
C05018-T20P	5,0	T00-20P50
C11804-T06P	0,5	T00-06P05
C46017-T20P	6,0	T00T-20P60
C82204-T06P	0,5	T00-06P05
CC05	0,9	H00-1509
CC08P-V13	2,0	T00-09P20
CC09P-D11	2,0	T00-09P20
CC12P-S12	3,5	T00-15P35
CC14	6,0	H00T-4060
CC16	10,0	–
CC17P	10,0	–
CC17P-06	10,0	–
CC17P-09	10,0	–
CC20P	10,0	–
CC20P-V13	10,0	–
CD09-S09	2,0	T00-09P20
CD12-S12	3,5	T00-15P35
CD16-S16	5,0	T00-20P50
CD19-S19	5,0	T00-20P50
CD19-V16	5,0	T00-20P50
CSC8015-T20P	5,0	T00-20P50
CSC1015-T20P	5,0	T00-20P50
CSP16-T15P	2,0	T00-15P20
CSP22-T15P	3,0	T00-15P30
CSP27-T25P	6,0	T00T-25P60

Screw designation	Torque Nm	Torque key
L84017-T09P	2,0	T00-09P20
L85011-T15P	5,0	T00-15P50
L85012-T15P	5,0	T00-15P50
L85017-T09P	2,0	T00-09P20
L85020-T15P	3,5	T00-15P35
L85021-T15P	3,5	T00-15P35
L86015-T20P	6,0	T00T-20P60
L86025-T20P	6,0	T00T-20P60
LD1035-T25P	6,0	T00T-25P60
LD5020-T09P	2,0	T00-09P20
LD6020-T15P	3,0	T00-15P30
LD6021-T09P	2,0	T00-09P20
LD6024-T20P	3,0	T00-15P30
LD6025-T15P	3,0	T00-15P30
LD6026-T09P	2,0	T00-09P20
LD8025-T25P	6,0	T00T-25P60
LD8030-T25P	6,0	T00T-25P60
LS0512	2,5	–
LS0613	3,0	H00-2530
LS0616	3,0	H00-2530
LS0818	4,0	–
LS0822	4,0	–
MC6S4X14	3,5	–
MC6S4X18	3,5	–
MC6S5X14	5,0	H00T-4050
MC6S5X18	5,0	H00T-4050
MN0909L-T09P	2,0	T00-09P20
MN1215L-T15P	3,0	T00-15P30
MN1215R-T15P	3,0	T00-15P30
MN1215S-T15P	3,0	T00-15P30
MN1215T-T15P	3,0	T00-15P30
MN1515-T15P	3,0	T00-15P30
MN1515SL-T15P	3,0	T00-15P30
MN1520-T20P	6,0	T00T-20P60
MN1920-T20P	6,0	T00T-20P60
MN1925-T25P	5,0	T00T-25P50
MN2525-T25P	6,0	T00T-25P60
PL1403-T09P	2,5	T00-09P20
TCEI0409	3,5	–
TCEI0509	6,0	H00T-4060
TCEI0513	6,0	H00T-4060
TCEI0609	8,0	H00T-5080
TCEI0613	8,0	H00T-5080
TCEI0614	8,0	H00T-5080
TCEI0620	8,0	H00T-5080
TCEI0815	10,0	H00T-60100
TCEI0825	10,0	H00T-60100
TCEI1020	15,0	–
WS1620-T20P	3,5	T00-20P35
WS1920-T20P	3,5	T00-20P35
WS2325-T25P	5,0	T00T-25P50

For the Seco range of torque keys, please see next page

Thread turning – Torque keys

Code key: T00-15P35

T00 = Torque screwdriver type for Torx Plus blade
T00T = Torque T-handle type for Torx Plus blade
H00 = Torque screwdriver for hexagonal blade
H00T = Torque T-handle type for hexagonal blade

15P = Torx Plus size
35 = Torque value 3,5 Nm

Torque key*	Replaceable blade	Torx Plus size	Torque value
T00-06P05	T00-06P	T06P	0,5 Nm
T00-07P05	T00-07P	T07P	0,5 Nm
T00-07P09	T00-07P	T07P	0,9 Nm
T00-08P12	T00-08P	T08P	1,2 Nm
T00-08P20	T00-08P	T08P	2,0 Nm
T00-09P09	T00-09P	T09P	0,9 Nm
T00-09P12	T00-09P	T09P	1,2 Nm
T00-09P20	T00-09P	T09P	2,0 Nm
T00-10P20	T00-10P	T10P	2,0 Nm
T00-10P30	T00-10P	T10P	3,0 Nm
T00-10P35	T00-10P	T10P	3,5 Nm
T00-15P20	T00-15P	T15P	2,0 Nm
T00-15P30	T00-15P	T15P	3,0 Nm
T00-15P40	T00-15P	T15P	4,0 Nm
T00-15P35	T00-15P	T15P	3,5 Nm
T00-15P50	T00-15P	T15P	5,0 Nm
T00-20P35	T00-20P	T20P	3,5 Nm
T00-20P50	T00-20P	T20P	5,0 Nm

*Including blade

Torque key* 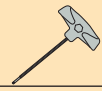	Replaceable blade	Torx Plus size	Torque value
T00T-15P50	T00T-15P	T15P	5,0 Nm
T00T-20P50	T00T-20P	T20P	5,0 Nm
T00T-20P60	T00T-20P	T20P	6,0 Nm
T00T-20P80	T00T-20P	T20P	8,0 Nm
T00T-25P50	T00T-25P	T25P	5,0 Nm
T00T-25P60	T00T-25P	T25P	6,0 Nm
T00T-25P80	T00T-25P	T25P	8,0 Nm
T00T-30P80	T00T-30P	T30P	8,0 Nm

*Including blade

Torque key*	Replaceable blade	Hexagonal size	Torque value
H00-1305	H00-1.3	1,3 mm	0,5 Nm
H00-1505	H00-1.5	1,5 mm	0,5 Nm
H00-1509	H00-1.5	1,5 mm	0,9 Nm
H00-2009	H00-2.0	2,0 mm	0,9 Nm
H00-2016	H00-2.0	2,0 mm	1,6 Nm
H00-2020	H00-2.0	2,0 mm	2,0 Nm
H00-2512	H00-2.5	2,5 mm	1,2 Nm
H00-2530	H00-2.5	2,5 mm	3,0 Nm
H00-2535	H00-2.5	2,5 mm	3,5 Nm
H00-3020	H00-3.0	3,0 mm	2,0 Nm
H00-3030	H00-3.0	3,0 mm	3,0 Nm
H00-4030	H00-4.0	4,0 mm	3,0 Nm

*Including blade

Torque key*	Replaceable blade	Hexagonal size	Torque value
H00T-3050	H00T-3.0	3 mm	5,0 Nm
H00T-4050	H00T-4.0	4 mm	5,0 Nm
H00T-4060	H00T-4.0	4 mm	6,0 Nm
H00T-5050	H00T-5.0	5 mm	5,0 Nm
H00T-5080	H00T-5.0	5 mm	8,0 Nm
H00T-50100	H00T-5.0	5 mm	10,0 Nm
H00T-60100	H00T-6.0	6 mm	10,0 Nm

*Including blade

Please observe that the blades are not interchangeable between screwdriver type and T-handle type.
Torx Plus® is a registered trade mark belonging to Camcar-Textron (USA)

External toolholders

PER/L...QHDJETI	CER/L CER/L...HD	CER/L...Q CER/L...QHD	CER...CQHD	CER...HD CER/L...QHD	
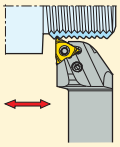	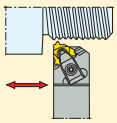	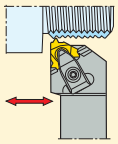	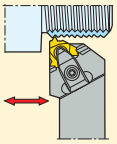	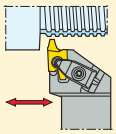	
Page(s) 44	Page(s) 48 - 49	Page(s) 50 - 51	Page(s) 52	Page(s) 53 - 54	

Internal toolholders

PNR/L...AHDJET	SNR/L	CNR/L...AHD CNR/L...APIHD	CNR/L...AHD	
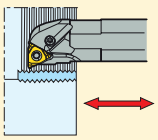	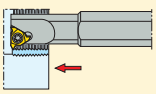	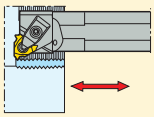	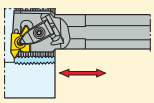	
Page(s) 45-47	Page(s) 55	Page(s) 56 - 58	Page(s) 59	

Seco-Capto™

CER/L-..HD Ext.	CER/L-..CHD Ext.	CER..HD Ext.	SNR Int.	CNR/L-..HD Int.	CNR/L-..CHD Int.
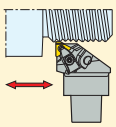	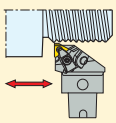	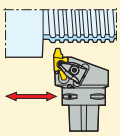	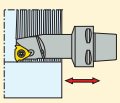	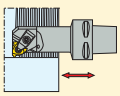	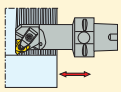
Page(s) 60 - 61	Page(s) 62 - 63	Page(s) 64	Page(s) 65	Page(s) 65-69	Page(s) 70-72

Seco-Capto™ for MTM

CER-..HD	CEL..HD	
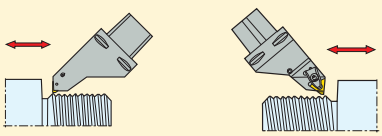	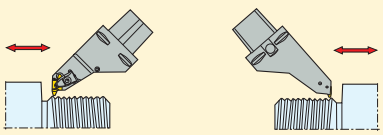	
Page(s) 77	Page(s) 78	

Steadyline® with GL connection

GL..-PNR/L...AHDJET	GL50-CNR...26AHD	
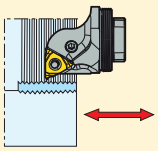	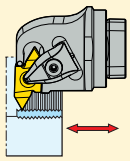	
Page(s) 73 - 74	Page(s) 75	

Quick Change, Jetstream Tooling®, QC-heads, external

QC..-PER/L-HDJET	
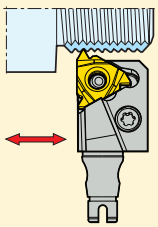	
Page(s) 76	

Toolholders for peeling

Inserts for peeling

CSXCR...		SCNN	
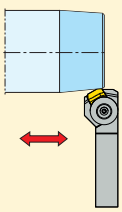			
Page(s) 79		Page(s) 81	

Toolholders for pipe-facing

MSGNR...	
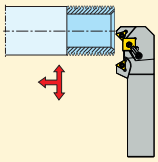 Page(s) 80	

Toolholders for inserts SNMA, SNMG, SNMM / CNMA, CNMG, CNMM

C.-DSKNR/L - CLNR/L 75°	C.-MSKNR/L - PCLNR/L 75°	
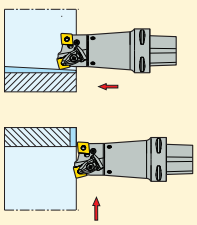 Page(s) 82	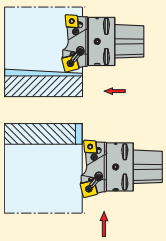 Page(s) 83	

Toolholders for chasers

External toolholders for chasers CER...X	Seco-Capto™ CER/L...X	Seco-Capto™ CNR/L...X	Seco-Capto™ CNL...C-X	Steadyline® GL.. -CNR/L...-I/X
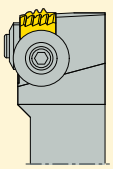 Page(s) 84	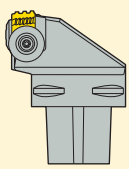 Page(s) 85	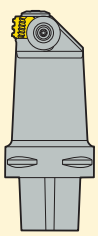 Page(s) 86 - 87	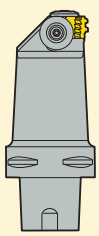 Page(s) 88 - 89	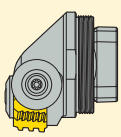 Page(s) 90

Thread turning – Application overview, inserts

Partial profile inserts	**55° V profile** 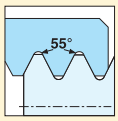 Page(s) 91-92	**60° V profile** 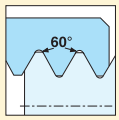 Page(s) 93-94			
Full profile inserts **Reusable threaded joints**	**ISO metric** 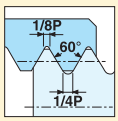 Page(s) 95-98	**UN** 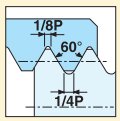 Page(s) 99-102			
Full profile inserts **Reusable threaded joints for the aerospace industry**	**UNJ** 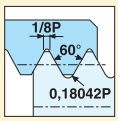 Page(s) 103	**MJ** 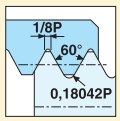 Page(s) 103			
Full profile inserts **Permanent threaded joints for pipe mountings and couplings**	**Whitworth, BSW** 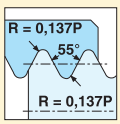 Page(s) 105-106	**BSPT** 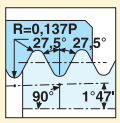 Page(s) 107	**NPT** 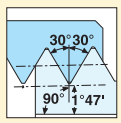 Page(s) 108-109	**NPTF** 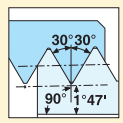 Page(s) 110	**Round-DIN405** 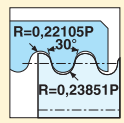 Page(s) 111
Partial profile inserts **Motion-transmitting threads**	**TR-DIN103** 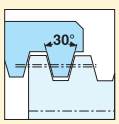 Page(s) 112-113	**ACME** 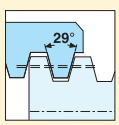 Page(s) 114-115	**Stub-ACME** 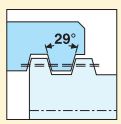 Page(s) 116-117		
Full profile inserts **Threads for the oil industry**	**API Rotary Drill Connection** 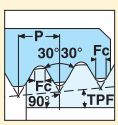 Page(s) 118	**Hughes Flush** 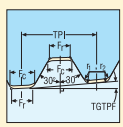 Page(s) 119-120	**API ROUND** 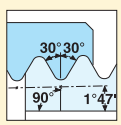 Page(s) 121	**API Buttress 1:16 VAM Buttress 1:16** 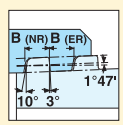 Page(s) 122	**API Buttress 1:12** 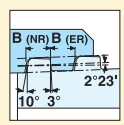 Page(s) 123
Full profile inserts **Threads for the oil industry**	**Hughes H90** 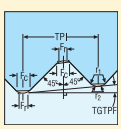 Page(s) 119-120	**Hughes Slimline H90** 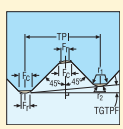 Page(s) 119-120	**P.A.C** 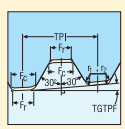 Page(s) 119-120	**Chasers API/Gost** 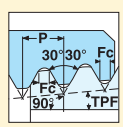 Page(s) 124	**Chipformers for chasers** 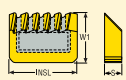 Page(s) 125-126

Rotary drilling connections

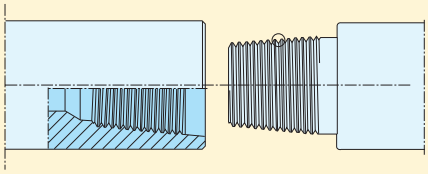

Connections	Pitch TPI	TGTPF	API code	Snap-Tap® code
API Number				
NC10 - NC16	6,0	1,5	V055	6API558
NC23 - NC50	4,0	2,0	V038R	4API386
NC56 - NC77	4,0	3,0	V038R	4API384
API Regular				
1 - 1 1/2 REG	6,0	1,5	V055	6API558
2 3/8 REG - 4 1/2 REG	5,0	3,0	V040	5API404
5 1/2 REG, 7 5/8 REG, 8 5/8 REG	4,0	3,0	V050	4API504
6 5/8 REG	4,0	2,0	V050	4API506
Internal Flush				
2 3/8 IF - 6 5/8 IF	4,0	2,0	V038R	4API386
Full Hole				
3 1/2 FH, 4 1/2 FH	5,0	3,0	V040	5API404
4 FH	4,0	2,0	V038R	4API386
5 1/2 FH, 6 5/8 FH	4,0	2,0	V050	4API506
Hughes External Flush				
2 3/8, 2 7/8	6,0	2,0	–	6HEF
3 1/2, 4 1/2	4,0	2,0	V038R	4API386
Hughes Xtra Hole				
2 7/8 - 5	4,0	2,0	V038R	4API386
Hughes Slim Hole				
2 3/8 - 4 1/2	4,0	2,0	V038R	4API386
Hughes Double Streamline				
3 1/2 - 5 1/2	4,0	2,0	V038R	4API386
Hughes H90				
3 1/2 - 6 5/8	3,5	2,0	90V050	3.5H906
7 - 8 5/8	3,5	3,0	90V050	3.5H904
Hughes Slimline H90				
2 3/8 - 3 1/2	3,0	1,25	90V050	3H90
Hughes ACME Regular				
2 3/8 - 6 5/8	4,0	3,373	–	4HACME
Hughes ACME Streamline				
2 3/8 - 5 1/2	4,0	3,373	–	4HACME
P.A.C.				
2 3/8 PAC - 3 1/2 PAC	4,0	1,5	V076	4PAC
Macaroni				
MT, AMT, AMMT	6,0	1,5	V055	6API558

Rotary drilling connections

Connections

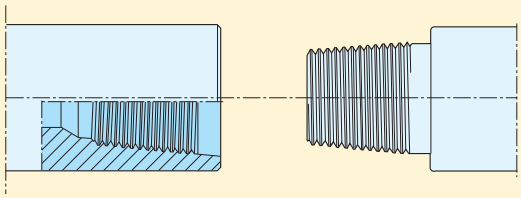

Insert dimensions

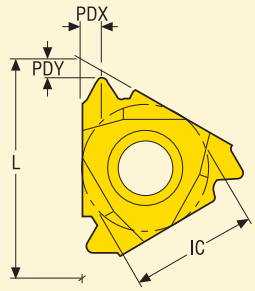

Connections				Dimensions in mm			
Snap-Tap® code	API code	Pitch TPI	TGTPF	L	IC	PDX	PDY
6API558	V055	6,0	1,5	22,0	12,700	2,5	2,0
5API404	V040	5,0	3,0	22,0	12,700	2,5	2,0
5API404	V040	5,0	3,0	27,5	15,875	3,2	2,2
4API386	V038R	4,0	2,0	22,0	12,700	2,5	1,9
4API386	V038R	4,0	2,0	27,5	15,875	3,2	2,2
4API384	V038R	4,0	3,0	27,5	15,875	3,2	2,2
4API506	V050	4,0	2,0	27,5	15,875	3,2	2,2
4API504	V050	4,0	3,0	27,5	15,875	3,2	2,2
6HEF	–	6,0	2,0	22,0	12,700	2,5	2,0
4PAC	V076	4,0	1,5	27,5	15,875	3,2	2,2
3,5H906	90V050	3,5	2,0	27,5	15,875	3,2	2,2
3,5H904	90V050	3,5	3,0	27,5	15,875	3,2	2,2
3H90	90V050	3,0	1,25	27,5	15,875	3,2	2,2
4HACME	–	4,0	3,373	27,5	15,875	3,2	2,2

Thread profile

Profile	TPI	TGTPF	Dimensions in mm				API code	Snap-Tap® code
			R/F_r	F_c	r_1	r_2		
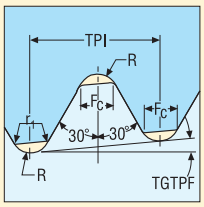	5,0	3,0	0,508	1,016	0,381	–	V040	5API404
	4,0	2,0	0,965	1,651	0,381	–	V038R	4API386
	4,0	3,0	0,965	1,651	0,381	–	V038R	4API384
	4,0	2,0	0,635	1,270	0,381	–	V050	4API506
	4,0	3,0	0,635	1,270	0,381	–	V050	4API504
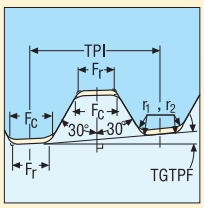	6,0	1,5	1,194	1,397	0,381	0,381	V055	6API558
	6,0	2,0	0,559	0,813	0,381	0,381	–	6HEF
	4,0	1,5	1,702	1,930	0,381	0,381	V076	4PAC
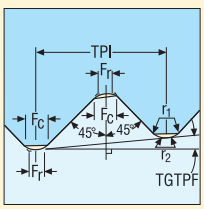	3,5	2,0	0,864	1,270	0,381	0,762	90V050	3,5H906
	3,5	3,0	0,864	1,270	0,381	0,762	90V050	3,5H904
	3,0	1,25	1,727	2,134	0,381	0,762	90V050	3H90
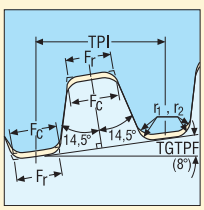	4,0	3,373	2,253	2,388	0,787	0,787	–	4HACME

Seco Snap-Tap® Quality Assurance

1. Metallurgical control of substrate
Check of substrate regarding Hc, MM and porosity
Measured according to SPM
Values stored in a database

2. Dimension check after sintering
Measuring of IC and thickness
Measured according to SPM
Values stored in a database

3. Dimension control after bottom grinding
Thickness and cutting edge height
Flatness
Measured according to SPM

4. Dimension control after grinding
Profile and radius
Measured according to SPM

5. Edge measuring
Edge radius checked during honing
Measured according to SPM
Values stored in a database

6. Measuring of coating
Coating, check of thickness and adhesion
Measured according to SPM
Values stored in a database

7. Final inspection
Visual Inspection
Sampling in accordance to AQL

8. Production management System
SGS (SPM1) - Control specifications
LS - Production instructions
Seco Act - System for preventive and corrective actions
Approved to ISO 9001 and 14001 standard

9. Abbreviations
LS - Local management Systems - contains local process descriptions, routines, procedures and instructions
SGS - Seco Global Standards - consists of instructions common for all Seco companies
SPM - Seco Production Manual - Part of SGS is a collection of instructions and documents with the purpose to guide and maintain the quality level of Seco products
AQL - Accepted Quality Level (Mil-std)
MM - Content of Tungsten in binder
Hc - Coercivity, describing grainsize

Seco Chasers Quality Assurance

1. Metallurgical control of substrate
Check of substrate regarding Hc, MM and porosity
Measured according to SPM
Values stored in a database

2. Dimension control after top and bottom grinding
Thickness
Roughness Ra
Flatness
Measured according to SPM

3. Measuring after periphery Grinding
Optical measuring
Data stored in a database

4. Dimension control after grinding
Profile and radius
Measured according to SPM

5. Edge measuring
Edge radius checked during honing
Measured according to SPM
Values stored in a database

6. Measuring of coating
Coating (PVD), check of thickness and adhesion
Measured according to SPM
Values stored in a database

7. Height classification
Optical measuring of height
Graphic presentation of values
Sorted and labelled with height classification

8. Final inspection
Edge inspection 100%
Profile check with tolerance drawing, sampling in accordance to AQL

9. Traceability
Finished products from each order saved for future reference
Saved 5 years from production date
Finished product has full traceability

10. Overlay drawings
Printer for overlays is calibrated with glass scale monthly
Scaled master printout is saved according to SPM

11. Production management System
SGS (SPM1) - Control specifications
LS - Production instructions
Seco Act - System for preventive and corrective actions
Approved to ISO 9001 and 14001 standard

12. Abbreviations
LS - Local management Systems - contains local process descriptions, routines, procedures and instructions
SGS - Seco Global Standards - consists of instructions common for all Seco companies
SPM - Seco Production Manual - Part of SGS is a collection of instructions and documents with the purpose to guide and maintain the quality level of Seco products
AQL - Accepted Quality Level (Mil-std)
MM - Content of Tungsten in binder
Hc - Coercivity, describing grainsize

ISO attribute information

ISO attribute	Explanation
ALD	Active drill length
APMXS	Depth of cut maximum
B	Shank width
BAWS	Workpiece side body angle
BD	Body diameter
BSG	Basic standard group
C	Keyway depth
CDX	Cutting depth maximum
CF	Spot chamfer
CP	Coolant pressure
CW	Cutting width
CZC	Connection size code
DC	Cutting diameter
DCB	Connection bore diameter
DCINN	Minimum cutting diameter
DCSFMS	Contact surface diameter machine side
DCSFWS	Workpiece side contact surface diameter
DMM	Shank diameter
FHA	Flute helix angle
H	Shank height
HC	Thread hight actual
HF	Functional height
IC	Inscribed circle diameter
INSL	Insert length
KWW	Keyway width
L	Cutting edge length
LF	Functional length
LH	Head length
LPR	Protruding length
LS	Shank length
LU	Usable length
LUX	Maximum usable length
NOF	Flute count
NT	Tooth count
OAL	Overall length
PDX	Profile distance ex
PDY	Profile distance ey
PHDR	Recommended pre machined hole diameter
PHDX	Maximum pre machined hole diameter
PNA	Profile included angle
RE	Corner radius
S	Insert thickness
SIG	Point angle
STA	Step included angle
TCTR	Thread tolerance class
TDZ	Thread diameter size
TGTPF	Taper gradient taper per foot
THCHT	Thread chamfer type
THFT	Thread form type
THLGTH	Thread length
TPI	Threads per inch
TPIN	Minimum threads per inch
TPIX	Maximum threads per inch
TPX	Maximum thread pitch
TTP	Thread type
ULDR	Usable length diameter ratio
W1	Insert width
WF	Functional width
ZEFP	Peripheral effective cutting edge count

Jetstream Tooling® Introduction

Seco Jetstream Tooling® is a revolutionary solution to the problem of delivering coolant precisely to the cutting zone.

It works by delivering a concentrated high pressure jet of coolant at high velocity straight to the optimum position precisely to the cutting edge.

The jet lifts the chips away from the rake face, improving chip control and tool life, enabling increased cutting data.

It has been proven to show improvements in nearly all material groups with a wide choice of coolant pressures.

Seco Jetstream Tooling® Duo holders, yet another innovation introduced to the market, features both a rake face and a flank face jet, that may provide even better chip control and significantly longer tool life.

For many years, Seco has been supporting the market with Jetstream Tooling® solutions for ISO-turning and grooving applications. Now the Jetstream Tooling® technique will also be available on holders for thread turning (Snap-Tap®).

Coolant can either be supplied to the toolholder externally through a coolant hose, which is attached to one of the inlet positions of the toolholder, or by the new JETI connection.

When it comes to boring bars, the coolant is supplied internally from the back end.

For internal applications, holders for Steadyline® bars are also available, designated GL-. Please see more information regarding Steadyline® in MN Turning.

Square shank holders for external applications are designed with the Duo technique. They also have the option for coolant supply through JETI connection.

The JETI is developed with a compact assembly in mind, the tooling eliminates the need for any external piping and connections that would otherwise obstruct machine movements in tight workspaces. Coolant hole underneath the square shank holder make it possible for coolant to reach the cutting edge directly from the tool block.

Jetstream Tooling® Assembly instructions

For personal safety, Jetstream Tooling® should only be used with the machine door in a fully closed position in accordance with general machine safety procedures. Please ensure that the coolant hose is located correctly and fully tightened with all seals in position. The unused coolant hole should have a blanking plug fitted. Please note the maximum safe working pressures shown below.

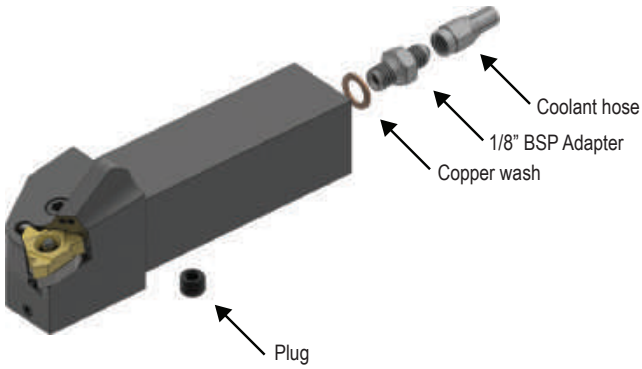

For accessories, see next page.

JETI Assembly instructions

To use the benefits of a JETI-holder there is a need to use a basic holder designed for JETI-connections. Maximum coolant pressure when using this feature is 150 bar.

Note: The unused coolant hole (from the back) should have a blanking plug fitted.

Hoses, Part No. ordering code includes spare parts

Connection type	Part No.	Length (mm)
Straight fitting	JET-HOSE150SS	150
	JET-HOSE200SS	200
	JET-HOSE250SS	250
	JET-HOSE300SS	300
Banjo fitting 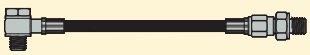	JET-HOSE150BS	150
	JET-HOSE200BS	200
	JET-HOSE250BS	250
	JET-HOSE300BS	300
Banjo-to-Banjo fitting	JET-HOSE150BB	150
	JET-HOSE200BB	200
	JET-HOSE250BB	250
	JET-HOSE300BB	300

All hoses are pressure rated to a maximum of 275 bar (3990 psi)
Please check availability in current price and stock-list

Spare Parts, Parts included in delivery

Part No.		...SS	...BS	...BB
JET-CFP1/8BSP		■	■	■
JET-CBP15		■	■	■
JET-AD1/8BSP		■	■	
JET-ADM10		■		
JET-BBM10			■	■
JET-BB1/8BSP			■	■
JET-C1/4-1/8BSP			■	■
JET-P1/8-5mm		■	■	■
JET-WM10*		■	■	■
JET-ORING10X1*/**		■	■	■

Pack of 2, except *Pack of 20
** Not suitable for use in inducer
For assembly instructions, see page(s) 42

Toolholders for S-inserts

Snap-Tap®

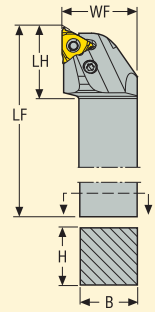

Right-hand version shown

- For inserts programme, see page(s) 91, 93, 95-96, 99-100, 103-105, 107-108, 110-112, 114, 116, 118-119, 121-123

* Max coolant pressure (bar) using hose connection otherwise according machine side adapter

Application	Designation	Dimensions in mm H	B	LF	LH	WF	CP*	KG	
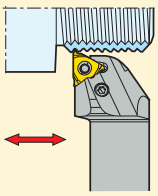	PER2020X16QHDJETI	20,0	20,0	91,0	30,0	25,0	275,0	0,5	16
	PEL2020X16QHDJETI	20,0	20,0	91,0	30,0	25,0	275,0	0,4	16
	PER2525X16QHDJETI	25,0	25,0	111,0	30,0	32,0	275,0	0,6	16
	PEL2525X16QHDJETI	25,0	25,0	111,0	30,0	32,0	275,0	0,7	16
	PER2525X22QHDJETI	25,0	25,0	125,0	44,0	32,0	275,0	0,7	22
	PER2525X27QHDJETI	25,0	25,0	125,0	44,0	32,0	275,0	0,7	27

Spare Parts, included in delivery

For holder	Insert lever	Insert shim (S)	Lever screw	Locking key	Shim pin
			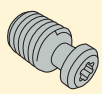		
...16QHD...	PP3712	GXA16-1	LS0612-T15P	T15P-7	AC4625
...22QHD...	PP4816	NXA22-1	LS0815-T25P	T25P-7	AC5035
...27QHD...	PP6019	VXA27-1	LS0820-T25P	T25P-7	AC6050

Accessories, to be ordered separately

For holder	Insert shim (M)	Insert shim (S)										
...16QHD...	MXA16-1	GXA16-0	–	–	GXA16-2	GXA16-3	GXA16-4	–	GXA16-98	–	GXA16-99	–
...22QHD...	MXA22-1	NXA22-0	NXA22-0.5	NXA22-1.5	NXA22-2	NXA22-3	NXA22-4	NXA22-97.5	NXA22-98	NXA22-98.5	NXA22-99	NXA22-99.5
...27QHD...	MXA27-1	VXA27-0	VXA27-0.5	VXA27-1.5	VXA27-2	VXA27-3	VXA27-4	–	VXA27-98	VXA27-98.5	VXA27-99	VXA27-99.5

Please check availability in current price and stock-list

Toolholders for S-inserts

Snap-Tap®

- For inserts programme, see page(s) 92, 94, 97-98, 101-104, 106-107, 109-111, 113, 115, 117, 121

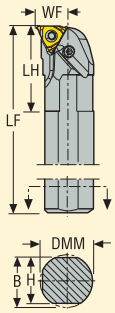

Right-hand version shown

Application	Designation	Dimensions in mm H	B	LF	WF	DCINN	DMM	LH	CP*	KG	
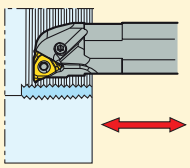	PNR0020P16AHDJET	19,0	18,0	171,0	13,8	24,0	20,0	42,0	275,0	0,5	16
	PNL0020P16AHDJET	19,0	18,0	171,0	13,8	24,0	20,0	42,0	275,0	0,5	16
	PNR0025R16AHDJET	24,0	23,0	200,0	16,3	29,0	25,0	42,0	275,0	0,7	16
	PNL0025R16AHDJET	24,0	23,0	200,0	16,3	29,0	25,0	42,0	275,0	0,6	16
	PNR0032S16AHDJET	30,0	31,0	250,0	19,8	36,0	32,0	42,0	275,0	1,2	16
	PNL0032S16AHDJET	30,0	31,0	250,0	19,8	36,0	32,0	42,0	275,0	1,5	16
	PNR0040T16AHDJET	38,5	37,0	300,0	23,8	44,0	40,0	45,0	275,0	2,2	16
	PNR0050U16AHDJET	47,0	48,5	350,0	28,8	44,0	50,0	52,0	275,0	3,2	16

Spare Parts, included in delivery

For holder	Insert lever	Insert shim (S)	Lever screw	Locking key	Shim pin
...20...	PP3712	GXA16-1	LS0610-T15P	T15P-7	AC4625
...25/32/40/50...	PP3712	GXA16-1	LS0612-T15P	T15P-7	AC4625

Accessories, to be ordered separately

For holder	Insert shim (M)	Insert shim (S)						
...20...	MXA16-1	GXA16-0	GXA16-1	GXA16-2	GXA16-3	GXA16-4	GXA16-98	GXA16-99
...25/32/40/50...	MXA16-1	GXA16-0	GXA16-1	GXA16-2	GXA16-3	GXA16-4	GXA16-98	GXA16-99

Please check availability in current price and stock-list

Toolholders for S-inserts

Snap-Tap®

- For inserts programme, see page(s) 92, 94, 97-98, 101-102, 106, 109,111, 113, 115, 117-118, 120, 122-123

* Max coolant pressure (bar) using hose connection otherwise according machine side adapter

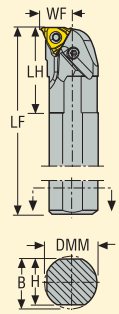

Right-hand version shown

Application	Designation	Dimensions in mm H	B	LF	WF	DCINN	DMM	LH	CP*	KG	
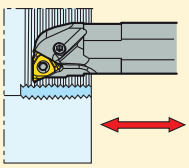	PNR0025R22AHDJET	23,0	24,0	200,0	17,8	30,0	25,0	42,0	275,0	0,7	22
	PNL0025R22AHDJET	23,0	24,0	200,0	17,8	30,0	25,0	42,0	275,0	1,2	22
	PNR0032S22AHDJET	30,0	31,0	250,0	21,3	38,0	32,0	42,0	275,0	1,5	22
	PNL0032S22AHDJET	30,0	31,0	250,0	21,3	38,0	32,0	42,0	275,0	1,5	22
	PNR0040T22AHDJET	37,0	38,5	300,0	25,3	46,0	40,0	42,0	275,0	2,9	22
	PNL0040T22AHDJET	37,0	38,5	300,0	25,3	46,0	40,0	42,0	275,0	2,7	22
	PNR0050U22AHDJET	47,0	48,5	350,0	30,3	56,0	50,0	48,0	275,0	3,3	22

Spare Parts, included in delivery

For holder	Insert lever	Insert shim (S)	Lever screw	Locking key	Shim pin
			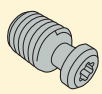		
...22...	PP4816	NXA22-1	LS0815-T25P	T25P-7	AC5035

Accessories, to be ordered separately

For holder	Insert shim (M)	Insert shim (S)											
...22...	MXA22-1	NXA22-0	NXA22-0.5	NXA22-1	NXA22-1.5	NXA22-2	NXA22-3	NXA22-4	NXA22-97.5	NXA22-98	NXA22-98.5	NXA22-99	NXA22-99.5

Please check availability in current price and stock-list

Toolholders for S-inserts

Snap-Tap®

- For inserts programme, see page(s) 97-98, 101, 111, 113, 115, 117-118, 120-121

* Max coolant pressure (bar) using hose connection otherwise according machine side adapter

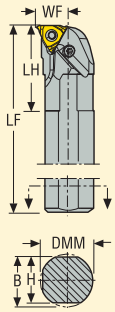

Right-hand version shown

Application	Designation	Dimensions in mm H	B	LF	WF	DCINN	DMM	LH	CP*	KG	
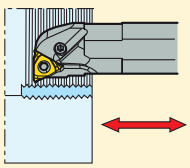	PNR0040T27AHDJET	37,0	38,5	300,0	26,8	48,0	40,0	62,0	275,0	2,8	27
	PNR0050U27AHDJET	47,0	48,5	350,0	31,8	58,0	50,0	62,0	275,0	4,3	27
	PNR0063V27AHDJET	60,0	61,5	400,0	38,3	70,0	63,0	62,0	275,0	10,0	27

Spare Parts, included in delivery

For holder	Insert lever	Insert shim (S)	Lever screw	Locking key	Shim pin
...27...	PP6019	VXA27-1	LS0820-T25P	T25P-7	AC6050

Accessories, to be ordered separately

For holder	Insert shim (M)	Insert shim (S)										
...27...	MXA27-1	VXA27-0	VXA27-0.5	VXA27-1	VXA27-1.5	VXA27-2	VXA27-3	VXA27-4	VXA27-98	VXA27-98.5	VXA27-99	VXA27-99.5

Please check availability in current price and stock-list

Toolholders for S-inserts

Snap-Tap®

- For inserts programme, see page(s) 91, 93, 95-96, 99-100, 103-105, 107-108, 110-112, 114, 116, 121

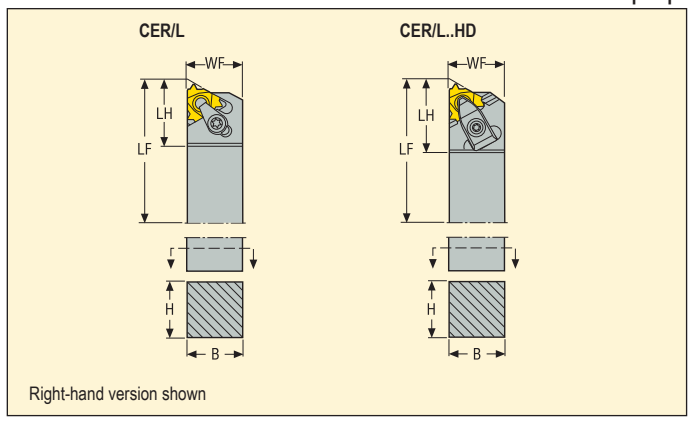

Right-hand version shown

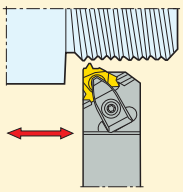

Designation	Dimensions in mm H	B	LF	WF	LH	KG	
CER1616H16	16,0	16,0	100,0	16,0	22,0	0,2	16
CER2020K16HD	20,0	20,0	125,0	20,0	32,0	0,4	16
CER2525M16HD	25,0	25,0	150,0	25,0	32,0	0,8	16
CER4040R16HD	40,0	40,0	200,0	40,0	37,0	2,5	16
CEL1616H16	16,0	16,0	100,0	16,0	22,0	0,2	16
CEL2020K16HD	20,0	20,0	125,0	20,0	32,0	0,4	16
CEL2525M16HD	25,0	25,0	150,0	25,0	32,0	0,8	16

Spare Parts, included in delivery

For holder	Cantilever clamp	Clamp key	Clamp kit	Clamp screw	Insert shim (S)	Shim screw	Spring
...16	–	T15P-2	CSP16-T15P	–	GX16-1	CS3507-T09P	–
...16HD	CHD16	T15P-7	–	L85020-T15P	GX16-1	CS3507-T09P	S6912

Accessories, to be ordered separately

For holder	Shim key	Insert shim (M)	Insert shim (S)					
...16	T09P-2	MX16-1	GX16-0	GX16-2	GX16-3	GX16-4	GX16-98	GX16-99
...16HD	T09P-2	MX16-1	GX16-0	GX16-2	GX16-3	GX16-4	GX16-98	GX16-99

Please check availability in current price and stock-list

Toolholders for S-inserts

Snap-Tap®

- For inserts programme, see page(s) 91, 93, 95-96, 99-100, 105, 108, 111,112, 114, 116, 118-119, 121-123

CER/L..HD

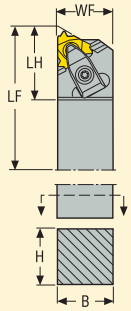

Right-hand version shown

Application	Designation	Dimensions in mm H	B	LF	WF	LH	KG	
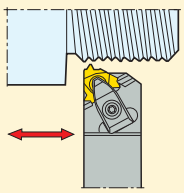	CER2525M22HD	25,0	25,0	150,0	25,0	38,0	0,8	22
	CER4040R22HD	40,0	40,0	200,0	40,0	42,0	2,5	22
	CEL2525M22HD	25,0	25,0	150,0	25,0	38,0	0,8	22
	CER4040R27HD	40,0	40,0	200,0	40,0	48,0	2,5	27

Spare Parts, included in delivery

For holder	Cantilever clamp	Clamp key	Clamp screw	Insert shim (S)	Shim screw	Spring
				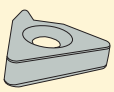		
...22HD	CHD22	T20P-7L	L86025-T20P	NX22-1	CS4009-T15P	S7616
...27HD	CHD27	T20P-7L	L86025-T20P	VX27-1	C05012-T15P	S7616

Accessories, to be ordered separately

For holder	Shim key	Insert shim (M)	Insert shim (S)										
...22HD	T15P-2	MX22-1	NX22-0	NX22-0.5	NX22-1.5	NX22-2	NX22-3	NX22-4	NX22-97.5	NX22-98	NX22-98.5	NX22-99	NX22-99.5
...27HD	T15P-2	MX27-1	VX27-0	VX27-0.5	VX27-1.5	VX27-2	VX27-3	VX27-4	–	VX27-98	VX27-98.5	VX27-99	VX27-99.5

Please check availability in current price and stock-list

Toolholders for S-inserts

Snap-Tap®

- For inserts programme, see page(s) 91, 93, 95-96, 99-100, 103-105, 107-108, 110-112, 114, 116, 121

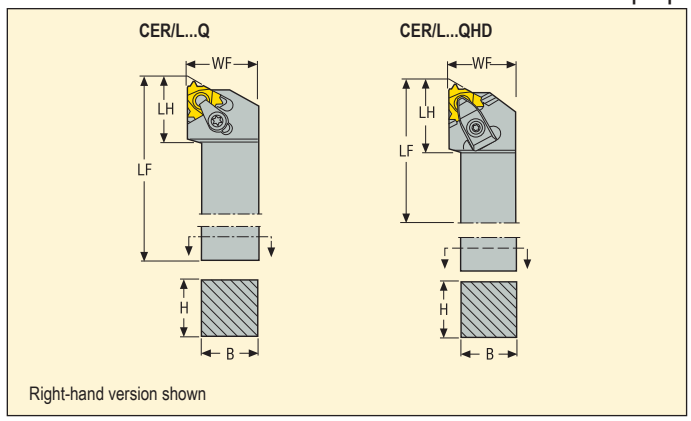

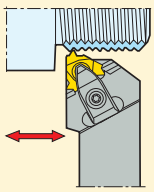

Application	Designation	Dimensions in mm H	B	LF	WF	LH	KG	
	CER1212H16Q	12,0	12,0	100,0	16,0	22,0	0,2	16
	CER1616H16Q	16,0	16,0	100,0	20,0	22,0	0,2	16
	CER2020K16QHD	20,0	20,0	125,0	25,0	32,0	0,5	16
	CER2525M16QHD	25,0	25,0	150,0	32,0	32,0	0,8	16
	CER3225P16QHD	32,0	25,0	170,0	32,0	32,0	1,1	16
	CER3232P16QHD	32,0	32,0	170,0	40,0	32,0	1,4	16
	CEL1212H16Q	12,0	12,0	100,0	16,0	22,0	0,2	16
	CEL1616H16Q	16,0	16,0	100,0	20,0	22,0	0,2	16
	CEL2020K16QHD	20,0	20,0	125,0	25,0	32,0	0,5	16
	CEL2525M16QHD	25,0	25,0	150,0	32,0	32,0	0,8	16
	CEL3225P16QHD	32,0	25,0	170,0	32,0	32,0	1,1	16
	CEL3232P16QHD	32,0	32,0	170,0	40,0	32,0	1,4	16

Spare Parts, included in delivery

For holder	Cantilever clamp	Clamp key	Clamp kit	Clamp screw	Insert shim (S)	Shim screw	Spring
...16Q	–	T15P-2	CSP16-T15P	–	GX16-1	CS3507-T09P	–
...16QHD	CHD16	T15P-7	–	L85020-T15P	GX16-1	CS3507-T09P	S6912

Accessories, to be ordered separately

For holder	Shim key	Insert shim (M)	Insert shim (S)					
...16Q	T09P-2	MX16-1	GX16-0	GX16-2	GX16-3	GX16-4	GX16-98	GX16-99
...16QHD	T09P-2	MX16-1	GX16-0	GX16-2	GX16-3	GX16-4	GX16-98	GX16-99

Please check availability in current price and stock-list

Toolholders for S-inserts

Snap-Tap®

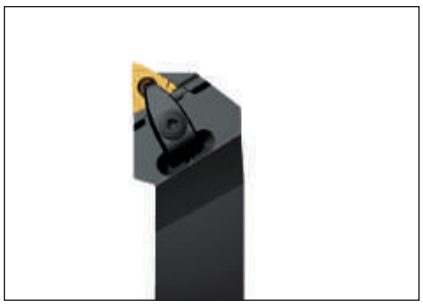

- For inserts programme, see page(s) 91, 93, 95-96, 99-100, 105, 108, 111,112, 114, 116, 118-119, 121-123

CER/L...QHD

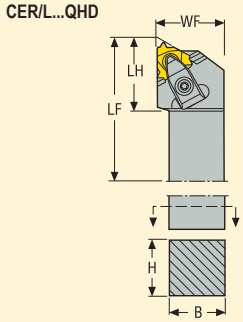

Right-hand version shown

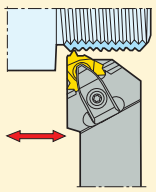

Application	Designation	Dimensions in mm H	B	LF	WF	LH	KG	
	CER2525M22QHD	25,0	25,0	150,0	32,0	38,0	0,8	22
	CER3225P22QHD	32,0	25,0	170,0	32,0	38,0	1,2	22
	CER3232P22QHD	32,0	32,0	170,0	40,0	38,0	1,4	22
	CEL2525M22QHD	25,0	25,0	150,0	32,0	38,0	0,8	22
	CEL3225P22QHD	32,0	25,0	170,0	32,0	38,0	1,1	22
	CEL3232P22QHD	32,0	32,0	170,0	40,0	38,0	1,4	22
	CER2525M27QHD	25,0	25,0	150,0	32,0	46,0	0,8	27
	CER3225P27QHD	32,0	25,0	170,0	32,0	46,0	1,2	27
	CER3232P27QHD	32,0	32,0	170,0	40,0	46,0	1,5	27
	CEL2525M27QHD	25,0	25,0	150,0	32,0	46,0	0,8	27
	CEL3225P27QHD	32,0	25,0	170,0	32,0	46,0	1,2	27
	CEL3232P27QHD	32,0	32,0	170,0	40,0	46,0	1,5	27

Spare Parts, included in delivery

For holder	Cantilever clamp	Clamp key	Clamp screw	Insert shim (S)	Shim screw	Spring
...22QHD	CHD22	T20P-7L	L86025-T20P	NX22-1	CS4009-T15P	S7616
...27QHD	CHD27	T20P-7L	L86025-T20P	VX27-1	C05012-T15P	S7616

Accessories, to be ordered separately

For holder	Shim key	Insert shim (M)	Insert shim (S)										
...22QHD	T15P-2	MX22-1	NX22-0	NX22-0.5	NX22-1.5	NX22-2	NX22-3	NX22-4	NX22-97.5	NX22-98	NX22-98.5	NX22-99	NX22-99.5
...27QHD	T15P-2	MX27-1	VX27-0	VX27-0.5	VX27-1.5	VX27-2	VX27-3	VX27-4	–	VX27-98	VX27-98.5	VX27-99	VX27-99.5

Please check availability in current price and stock-list

Toolholders for S-inserts

Snap-Tap®

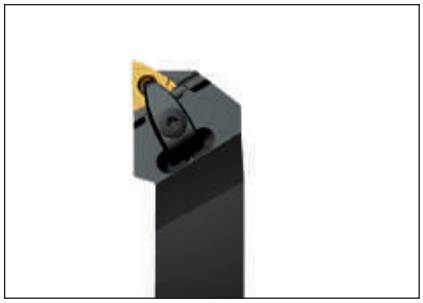

- For inserts programme, see page(s) 91, 93, 95-96, 99-100, 103-105, 107-108, 110-112, 114, 116, 118-119, 121-123

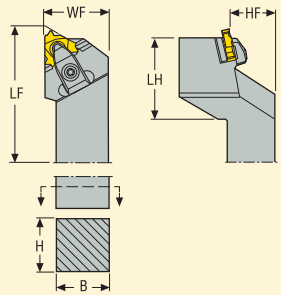

Right-hand version shown

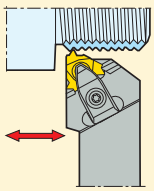

Application	Designation	Dimensions in mm H	B	LF	HF	WF	LH	KG	
	CER2525M16CQHD	25,0	25,0	150,0	25,0	32,0	45,0	0,9	16
	CER3232P16CQHD	32,0	32,0	170,0	32,0	40,0	45,0	1,5	16
	CER2525M22CQHD	25,0	25,0	150,0	25,0	32,0	50,0	0,9	22
	CER3232P22CQHD	32,0	32,0	170,0	32,0	40,0	50,0	1,5	22

Spare Parts, included in delivery

For holder	Cantilever clamp	Clamp key	Clamp screw	Insert shim (S)	Shim screw	Spring
..16CQHD	CHD16	T15P-7	L85020-T15P	GX16-1	CS3507-T09P	S6912
..22CQHD	CHD22	T20P-7L	L86025-T20P	NX22-1	CS4009-T15P	S7616

Accessories, to be ordered separately

For holder	Shim key	Insert shim (M)	Insert shim (S)					
..16CQHD	T09P-2	MX16-1	GX16-0	GX16-2	GX16-3	GX16-4	GX16-98	GX16-99
..22CQHD	T15P-2	MX22-1	NX22-0	NX22-2	NX22-3	NX22-4	NX22-98	NX22-99

Please check availability in current price and stock-list

Toolholders for K-inserts

Snap-Tap®

• For inserts programme, see page(s) 112, 114, 116

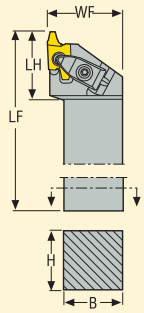

Right-hand version shown

Application	Designation	Dimensions in mm H	B	LF	WF	LH	KG	
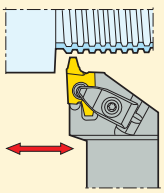	CER2525M20QHD	25,0	25,0	150,0	32,0	34,0	0,8	20
	CER3225P20QHD	32,0	25,0	170,0	32,0	34,0	1,1	20
	CER3232P20QHD	32,0	32,0	170,0	40,0	34,0	1,4	20
	CER4040R20HD	40,0	40,0	200,0	42,0	35,0	2,6	20
	CEL2525M20QHD	25,0	25,0	150,0	32,0	34,0	0,8	20
	CEL3225P20QHD	32,0	25,0	170,0	32,0	34,0	1,1	20
	CEL3232P20QHD	32,0	32,0	170,0	40,0	34,0	1,4	20

Spare Parts, included in delivery

For holder	Cantilever clamp	Clamp key	Clamp screw	Insert shim (K)	Shim screw	Spring
...20	CHD22	T20P-7	L86025-T20P	KX20-2	CS4009-T15P	S7616

Accessories, to be ordered separately

For holder	Shim key	Insert shim (K)					
...20	T15P-2	KX20-0	KX20-1	KX20-3	KX20-4	KX20-5	KX20-99

Please check availability in current price and stock-list

Toolholders for K-inserts

Snap-Tap®

- For inserts programme, see page(s) 91-94, 112, 114, 116

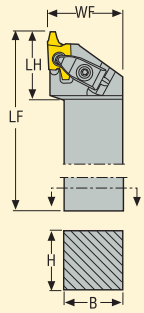

Right-hand version shown

Application	Designation	Dimensions in mm H	B	LF	WF	LH	KG	
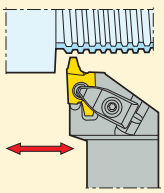	CER2525M26QHD	25,0	25,0	150,0	40,0	44,0	0,9	26
	CER3225P26QHD	32,0	25,0	170,0	40,0	44,0	1,2	26
	CER3232P26QHD	32,0	32,0	170,0	40,0	44,0	1,4	26
	CER4040R26HD	40,0	40,0	200,0	42,0	45,0	2,5	26
	CEL2525M26QHD	25,0	25,0	150,0	40,0	44,0	0,9	26
	CEL3225P26QHD	32,0	25,0	170,0	40,0	44,0	1,2	26
	CEL3232P26QHD	32,0	32,0	170,0	40,0	44,0	1,4	26

Spare Parts, included in delivery

For holder	Cantilever clamp	Clamp key	Clamp screw	Insert shim (K)	Shim screw	Spring
				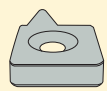		
...26	CHD27	T20P-7	L86025-T20P	KX26-2	C05012-T15P	S7616

Accessories, to be ordered separately

For holder	Shim key	Insert shim (K)					
...26	T15P-2	KX26-0	KX26-1	KX26-3	KX26-4	KX26-5	KX26-99

Please check availability in current price and stock-list

Toolholders for S-inserts

Snap-Tap®

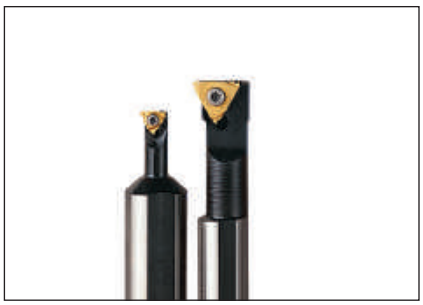

- For inserts programme, see page(s) 92, 94, 97-98, 101-104, 106-107, 109-111, 113, 115, 117-118, 120-123

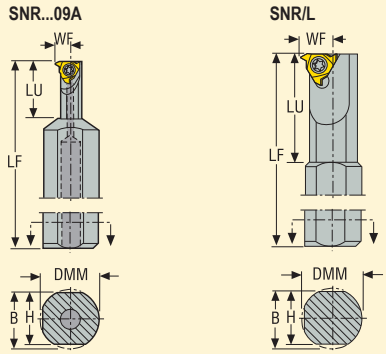

Right-hand version shown

Application	Designation	Dimensions in mm DMM	H	B	LF	LU	WF	DCINN	DCINN2	KG	
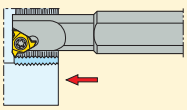											
	SNR0020L09A	20,0	18,0	19,0	140,0	20,0	5,1	10,2	–	0,3	09
	SNR0010H11	10,0	–	9,5	100,0	–	7,5	13,0	11,0	0,1	11
	SNR0010K11	16,0	14,0	15,5	125,0	30,0	6,5	12,0	11,0	0,2	11
	SNR0013L11	16,0	14,0	15,5	140,0	32,0	8,0	15,0	13,0	0,2	11
	SNL0010H11	10,0	–	9,5	100,0	–	7,5	13,0	11,0	0,1	11
	SNL0010K11	16,0	14,0	15,5	125,0	30,0	6,5	12,0	11,0	0,2	11
	SNL0013L11	16,0	14,0	15,5	140,0	32,0	8,0	15,0	13,0	0,2	11
	SNR0016M16	16,0	14,0	15,5	150,0	40,0	10,3	19,0	16,0	0,3	16
	SNL0016M16	16,0	14,0	15,5	150,0	40,0	10,3	19,0	16,0	0,3	16
	SNR0020Q22	20,0	18,0	19,0	180,0	45,0	13,0	24,0	22,0	0,4	22
	SNL0020Q22	20,0	18,0	19,0	180,0	45,0	13,0	24,0	22,0	0,4	22

DCINN2, modified. Please see page 27

Spare Parts, included in delivery

For holder	Insert key	Insert screw
...09A	T07P-2	C02205-T07P
...11	T07P-2	C02506-T07P
...16	T15P-2	C03508-T15P
...22	T15P-2	C04011-T15P

Please check availability in current price and stock-list

Toolholders for S-inserts

Snap-Tap®

- For inserts programme, see page(s) 92, 94, 97-98, 101-104, 106-107, 109-111, 113, 115, 117, 121

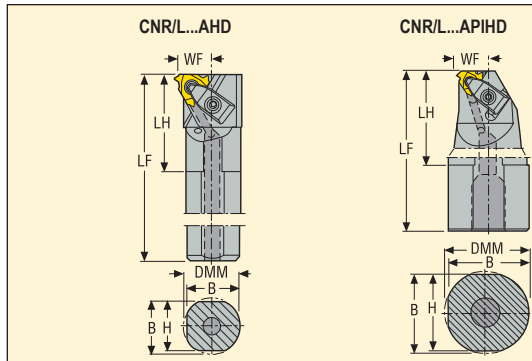

Right-hand version shown

Application	Designation	Dimensions in mm DMM	H	B	LF	LH	WF	DCINN	DCINN2	KG	
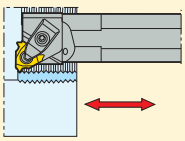	CNR0020P16AHD	20,0	18,0	19,0	170,0	41,0	13,8	24,0	–	0,4	16..
	CNR0025R16AHD	25,0	23,0	24,0	200,0	40,0	16,3	29,0	26,0	0,7	16..
	CNR0032S16AHD	32,0	30,0	31,0	250,0	47,0	19,8	36,0	32,0	1,4	16..
	CNR0040T16AHD	40,0	37,0	38,5	300,0	47,0	23,8	44,0	40,0	2,6	16..
	CNR0050U16AHD	50,0	47,0	48,5	350,0	45,0	28,8	54,0	50,0	4,8	16..
	CNL0020P16AHD	20,0	18,0	19,0	171,0	41,0	11,78	24,0	–	0,4	16..
	CNL0025R16AHD	25,0	23,0	24,0	171,0	40,0	11,78	29,0	26,0	0,7	16..
	CNL0032S16AHD	32,0	30,0	31,0	250,0	47,0	19,8	36,0	32,0	1,4	16..
	CNL0040T16AHD	40,0	37,0	38,5	300,0	47,0	23,8	44,0	40,0	2,6	16..

Spare Parts, included in delivery

DCINN2, modified. Please see page 27

For holder	Cantilever clamp	Clamp key	Clamp kit	Clamp screw	Insert shim (S)	Shim screw	Spring
					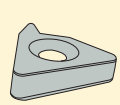		
..P, ..R16AHD	–	T15P-2	CSP16HD-T15P	–	GX16-1	CS3507-T09P	–
..S, ..T, ..U16AHD	CHD16	T15P-2	–	L85020-T15P	GX16-1	CS3507-T09P	S6912

Accessories, to be ordered separately

For holder	Shim key	Insert shim (M)	Insert shim (S)					
..P, ..R16AHD	T09P-2	MX16-1	GX16-0	GX16-2	GX16-3	GX16-4	GX16-98	GX16-99
..S, ..T, ..U16AHD	T09P-2	MX16-1	GX16-0	GX16-2	GX16-3	GX16-4	GX16-98	GX16-99

Please check availability in current price and stock-list

Toolholders for S-inserts

Snap-Tap®

- For inserts programme, see page(s) 92, 94, 97-98, 101-102, 106, 109-111, 113, 115, 117-118, 120, 122-123

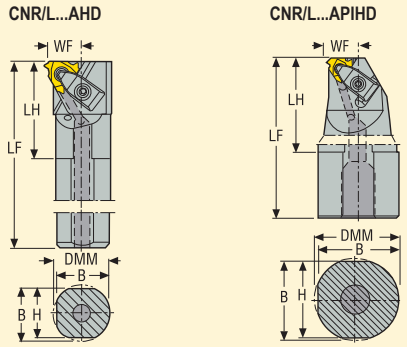

Right-hand version shown

Application	Designation	Dimensions in mm DMM	H	B	LF	LH	WF	DCINN	DCINN2	KG	
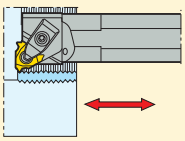	CNR0025R22AHD	25,0	23,0	24,0	200,0	45,0	17,8	30,0	–	0,7	22..
	CNR0032S22AHD	32,0	30,0	31,0	250,0	46,0	21,3	38,0	32,0	1,5	22..
	CNR0040T22AHD	40,0	37,0	38,5	300,0	53,0	25,3	46,0	40,0	2,6	22..
	CNR0050U22AHD	50,0	47,0	48,5	350,0	51,0	30,3	56,0	50,0	4,8	22..
	CNR0063V22AHD	63,0	60,0	61,5	400,0	56,0	36,8	69,0	63,0	9,0	22..
	CNL0025R22AHD	25,0	23,0	24,0	200,0	45,0	17,8	30,0	–	0,7	22..
	CNL0032S22AHD	32,0	30,0	31,0	250,0	46,0	21,3	38,0	32,0	1,4	22..
	CNL0040T22AHD	40,0	37,0	38,5	300,0	53,0	25,3	46,0	40,0	2,6	22..
	CNL0050U22AHD	50,0	47,0	48,5	350,0	51,0	30,3	56,0	50,0	4,8	22..
	CNR0050T22APIHD	50,0	47,0	48,5	300,0	114,0	20,5	49,0	–	3,7	22..
	CNR0063T22APIHD	63,0	60,0	61,5	300,0	119,0	22,6	50,5	–	5,4	22..
	CNL0063T22APIHD	63,0	60,0	61,5	300,0	119,0	22,6	50,5	–	5,4	22..

DCINN2, modified. Please see page 27

Spare Parts, included in delivery

For holder	Cantilever clamp	Clamp key	Clamp kit	Clamp screw	Insert shim (S)	Shim screw	Spring
					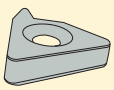		
...R22, ...S22	–	T15P-2	CSP22HD-T15P	–	NX22-1	CS4009-T15P	–
...T22, ...U22, ...V22	CHD22	T20P-7L	–	L86025-T20P	NX22-1	CS4009-T15P	S7616

Accessories, to be ordered separately

For holder	Shim key	Insert shim (M)	Insert shim (S)										
...R22, ...S22	–	MX22-1	NX22-0	NX22-0.5	NX22-1.5	NX22-2	NX22-3	NX22-4	NX22-97.5	NX22-98	NX22-98.5	NX22-99	NX22-99.5
...T22, ...U22, ...V22	T15P-2	MX22-1	NX22-0	NX22-0.5	NX22-1.5	NX22-2	NX22-3	NX22-4	NX22-97.5	NX22-98	NX22-98.5	NX22-99	NX22-99.5

Please check availability in current price and stock-list

Toolholders for S-inserts

Snap-Tap®

- For inserts programme, see page(s) 97-98, 101, 111, 113, 115, 117-118, 120-121

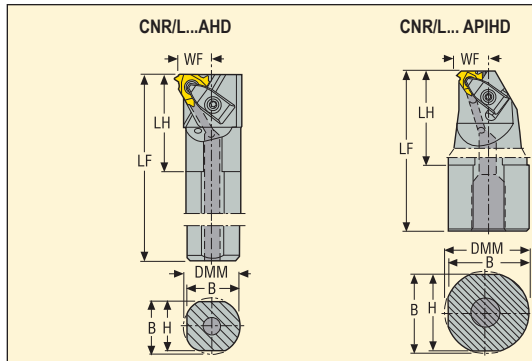

Right-hand version shown

Application	Designation	Dimensions in mm DMM	H	B	LF	LH	WF	DCINN	DCINN2	KG	
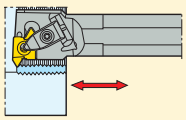	CNR0040T27AHD	40,0	37,0	38,5	300,0	62,0	26,8	48,0	44,0	2,6	27..
	CNR0050U27AHD	50,0	47,0	48,5	350,0	61,0	31,8	58,0	50,0	4,8	27..
	CNR0063V27AHD	63,0	60,0	61,5	400,0	70,0	38,3	70,0	63,0	8,9	27..
	CNL0040T27AHD	40,0	37,0	38,5	300,0	62,0	26,8	48,0	44,0	2,6	27..
	CNL0050U27AHD	50,0	47,0	48,5	350,0	61,0	31,8	58,0	50,0	4,8	27..
	CNR0063T27APIHD	63,0	60,0	61,5	300,0	119,0	23,1	50,5	–	5,6	27..
	CNL0063T27APIHD	63,0	60,0	61,5	300,0	119,0	23,1	50,5	–	5,4	27..

Spare Parts, included in delivery

DCINN2, modified. Please see page 27

For holder	Cantilever clamp	Clamp key	Clamp screw	Insert shim (S)	Shim screw	Spring
	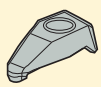			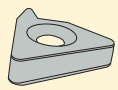		
..27..	CHD27	T20P-7L	L86025-T20P	VX27-1	C05012-T15P	S7616

Accessories, to be ordered separately

For holder	Shim key	Insert shim (M)	Insert shim (S)									
..27..	T15P-2	MX27-1	VX27-0	VX27-0.5	VX27-1.5	VX27-2	VX27-3	VX27-4	VX27-98	VX27-98.5	VX27-99	VX27-99.5

Please check availability in current price and stock-list

Toolholders for K-inserts

Snap-Tap®

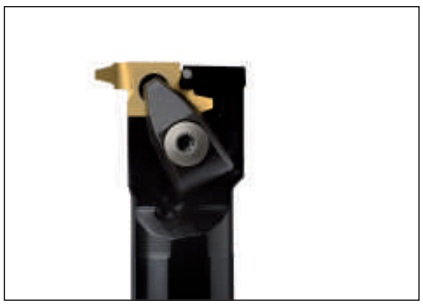

- For inserts programme, see page(s) 91-94, 113, 115, 117

CNR/L...AHD

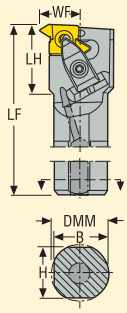

Right-hand version shown

Application	Designation	Dimensions in mm DMM	H	B	LF	LH	WF	DCINN	DCINN2	KG	
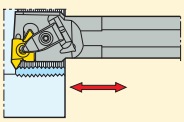	CNR0025R20AHD	25,0	23,0	24,0	200,0	50,0	20,5	38,0	–	0,7	20
	CNR0032S20AHD	32,0	30,0	31,0	250,0	50,0	24,0	44,0	38,0	1,5	20
	CNR0040T20AHD	40,0	37,0	38,5	300,0	50,0	28,0	51,0	40,0	2,6	20
	CNL0025R20AHD	25,0	23,0	24,0	200,0	50,0	20,5	38,0	–	0,7	20
	CNL0032S20AHD	32,0	30,0	31,0	250,0	50,0	24,0	44,0	38,0	1,4	20
	CNR0032S26AHD	32,0	30,0	31,0	250,0	61,0	27,0	50,0	50,0	1,5	26
	CNR0040T26AHD	40,0	37,0	38,5	300,0	60,0	31,0	55,0	50,0	2,6	26
	CNR0050U26AHD	50,0	47,0	48,5	350,0	62,0	36,0	65,0	–	4,8	26
	CNR0063V26AHD	63,0	60,0	61,5	400,0	64,0	42,5	80,0	63,0	8,9	26
	CNL0040T26AHD	40,0	37,0	38,5	300,0	60,0	31,0	55,0	50,0	2,6	26

Spare Parts, included in delivery

DCINN2, modified. Please see page 27

For holder	Cantilever clamp	Clamp key	Clamp screw	Insert shim (K)	Shim screw	Spring
				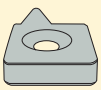		
...20AHD	CHD22	T20P-7L	L86025-T20P	KX20-2	CS4009-T15P	S7616
...26AHD	CHD27	T20P-7L	L86025-T20P	KX26-2	C05012-T15P	S7616

Accessories, to be ordered separately

For holder	Shim key	Insert shim (K)					
...20AHD	T15P-2	KX20-0	KX20-1	KX20-3	KX20-4	KX20-5	KX20-99
...26AHD	T15P-2	KX26-0	KX26-1	KX26-3	KX26-4	KX26-5	KX26-99

Please check availability in current price and stock-list

Toolholders for S-inserts

Snap-Tap®

- For inserts programme, see page(s) 91, 93, 95-96, 99-100, 103-105, 107-108, 110-112, 114, 116, 118-119, 121-123

CER/L-..HD

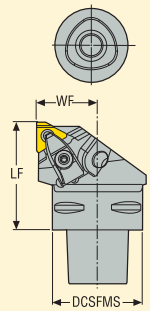

Right-hand version shown

Application	Designation	Dimensions in mm DCSFMS	LF	WF	KG	
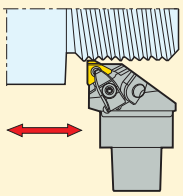	C4-CER-27050-16HD	40,0	50,0	27,0	0,5	16..
	C4-CEL-27050-16HD	40,0	50,0	27,0	0,5	16..
	C4-CER-27050-22HD	40,0	50,0	27,0	0,5	22..
	C4-CEL-27050-22HD	40,0	50,0	27,0	0,5	22..
	C5-CER-35060-16HD	50,0	60,0	35,0	0,8	16..
	C5-CEL-35060-16HD	50,0	60,0	35,0	0,8	16..
	C5-CER-35060-22HD	50,0	60,0	35,0	0,8	22..
	C5-CEL-35060-22HD	50,0	60,0	35,0	0,8	22..
	C5-CER-35060-27HD	50,0	60,0	35,0	0,8	27..
	C5-CEL-35060-27HD	50,0	60,0	35,0	0,8	27..

Spare Parts, included in delivery

For holder	Cantilever clamp	Clamp key	Clamp screw	Coolant nozzle	Insert shim (S)	Shim screw	Spring
...16HD	CHD16	T15P-7	L85020-T15P	CN16	GX16-1	CS3507-T09P	S6912
...22HD	CHD22	T20P-7L	L86025-T20P	CN16	NX22-1	CS4009-T15P	S7616
...27HD	CHD27	T20P-7L	L86025-T20P	CN16	VX27-1	C05012-T15P	S7616

Accessories, to be ordered separately

For holder	Shim key	Insert shim (M)	Insert shim (S)										
...16HD	T09P-2	MX16-1	GX16-0	GX16-2	GX16-3	GX16-4	GX16-98	GX16-99	–	–	–	–	–
...22HD	T15P-2	MX22-1	NX22-0	NX22-0.5	NX22-1.5	NX22-2	NX22-3	NX22-4	NX22-97	NX22-98	NX22-98.5	NX22-99	NX22-99.5
...27HD	T15P-7	MX27-1	VX27-0	VX27-0.5	VX27-1.5	VX27-2	VX27-3	VX27-4	–	VX27-98	VX27-98.5	VX27-99	VX27-99.5

Please check availability in current price and stock-list

Toolholders for S-inserts

Snap-Tap®

- For inserts programme, see page(s) 91, 93, 95-96, 99-100, 103-105, 107-108, 110-112, 114, 116, 118-119, 121-123

CER/L-..HD

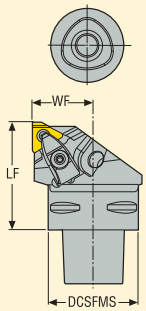

Right-hand version shown

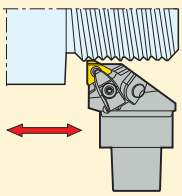

Application	Designation	Dimensions in mm DCSFMS	LF	WF	KG	
	C6-CER-45065-16HD	63,0	65,0	45,0	1,3	16..
	C6-CEL-45065-16HD	63,0	65,0	45,0	1,3	16..
	C6-CER-45065-22HD	63,0	65,0	45,0	1,3	22..
	C6-CEL-45065-22HD	63,0	65,0	45,0	1,3	22..
	C6-CER-45065-27HD	63,0	65,0	45,0	1,3	27..
	C6-CEL-45065-27HD	63,0	65,0	45,0	1,3	27..

Spare Parts, included in delivery

For holder	Cantilever clamp	Clamp key	Clamp screw	Coolant nozzle	Insert shim (S)	Shim screw	Spring
...16HD	CHD16	T15P-7	L85020-T15P	CN16	GX16-1	CS3507-T09P	S6912
...22HD	CHD22	T20P-7L	L86025-T20P	CN16	NX22-1	CS4009-T15P	S7616
...27HD	CHD27	T20P-7L	L86025-T20P	CN16	VX27-1	C05012-T15P	S7616

Accessories, to be ordered separately

For holder	Shim key	Insert shim (M)	Insert shim (S)										
...16HD	T09P-2	MX16-1	GX16-0	GX16-2	GX16-3	GX16-4	GX16-98	GX16-99	–	–	–	–	–
...22HD	T15P-2	MX22-1	NX22-0	NX22-0.5	NX22-1.5	NX22-2	NX22-3	NX22-4	NX22-97.5	NX22-98	NX22-98.5	NX22-99	NX22-99.5
...27HD	T15P-2	MX27-1	VX27-0	VX27-0.5	VX27-1.5	VX27-2	VX27-3	VX27-4	–	VX27-98	VX27-98.5	VX27-99	VX27-99.5

Please check availability in current price and stock-list

Toolholders for S-inserts

Snap-Tap®

- For inserts programme, see page(s) 91, 93, 95-96, 99-100, 103-105, 107-108, 110-112, 114, 116, 121

CER/L-..CHD

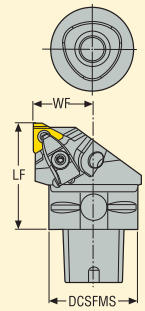

Right-hand version shown

Application	Designation	Dimensions in mm DCSFMS	LF	WF	KG	
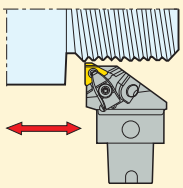						
	C4-CER-27050-16CHD	40,0	50,0	27,0	0,5	16
	C4-CEL-27050-16CHD	40,0	50,0	27,0	0,5	16
	C5-CER-35060-16CHD	50,0	60,0	35,0	0,8	16
	C5-CEL-35060-16CHD	50,0	60,0	35,0	0,8	16
	C6-CER-45065-16CHD	63,0	65,0	45,0	1,3	16
	C6-CEL-45065-16CHD	63,0	65,0	45,0	1,3	16

Spare Parts, included in delivery

For holder	Cantilever clamp	Clamp key	Clamp screw	Coolant nozzle	Insert shim (S)	Shim screw	Spring
					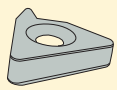		
...16CHD	CHD16	T15P-7	L85020-T15P	CN16	GX16-1	CS3507-T09P	S6912

Accessories, to be ordered separately

For holder	Shim key	Insert shim (M)	Insert shim (S)					
...16CHD	T09P-2	MX16-1	GX16-0	GX16-2	GX16-3	GX16-4	GX16-98	GX16-99

Please check availability in current price and stock-list

Toolholders for S-inserts

Snap-Tap®

- For inserts programme, see page(s) 91, 93, 95-96, 99-100, 105, 108, 111-112, 114, 116, 118-119, 121-123

CER/L-..CHD

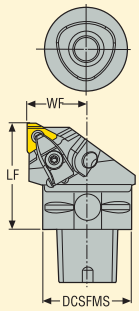

Right-hand version shown

Application	Designation	Dimensions in mm DCSFMS	LF	WF	KG	
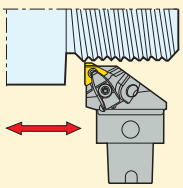	C4-CER-27050-22CHD	40,0	50,0	27,0	0,5	22
	C4-CEL-27050-22CHD	40,0	50,0	27,0	0,5	22
	C5-CER-35060-22CHD	50,0	60,0	35,0	0,8	22
	C5-CEL-35060-22CHD	50,0	60,0	35,0	0,8	22
	C6-CER-45065-22CHD	63,0	65,0	45,0	1,3	22
	C6-CEL-45065-22CHD	63,0	65,0	45,0	1,3	22
	C6-CER-45065-27CHD	63,0	65,0	45,0	1,3	27
	C6-CEL-45065-27CHD	63,0	65,0	45,0	1,3	27

Spare Parts, included in delivery

For holder	Cantilever clamp	Clamp key	Clamp screw	Coolant nozzle	Insert shim (S)	Shim screw	Spring
					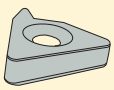		
...22CHD	CHD22	T20P-7L	L86025-T20P	CN16	NX22-1	CS4009-T15P	S7616
...27CHD	CHD27	T20P-7L	L86025-T20P	CN16	VX27-1	C05012-T15P	S7616

Accessories, to be ordered separately

For holder	Shim key	Insert shim (M)	Insert shim (S)										
...22CHD	T15P-2	MX22-1	NX22-0	NX22-0.5	NX22-1.5	NX22-2	NX22-3	NX22-4	NX22-97.5	NX22-98	NX22-98.5	NX22-99	NX22-99.5
...27CHD	T15P-2	MX27-1	VX27-0	VX27-0.5	VX27-1.5	VX27-2	VX27-3	VX27-4	–	VX27-98	VX27-98.5	VX27-99	VX27-99.5

Please check availability in current price and stock-list

Toolholders for K-inserts

Snap-Tap®

- For inserts programme, see page(s) 91-94, 112, 114, 116

CER...HD

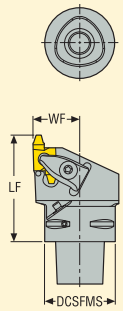

Right-hand version shown

Application	Designation	Dimensions in mm DCSFMS	LF	WF	KG	
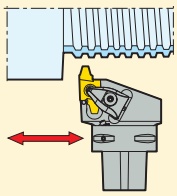	C4-CER-27060-20HD	40,0	60,0	27,0	0,6	20..
	C4-CER-27065-26HD	40,0	65,0	27,0	0,6	26..
	C5-CER-35060-20HD	50,0	60,0	35,0	0,8	20..
	C5-CER-35065-26HD	50,0	65,0	35,0	0,8	26..
	C6-CER-45065-20HD	63,0	65,0	45,0	1,3	20..
	C6-CER-45070-26HD	63,0	70,0	45,0	1,5	26..

Spare Parts, included in delivery

For holder	Cantilever clamp	Clamp key	Clamp screw	Coolant nozzle	Insert shim (K)	Shim screw	Spring
					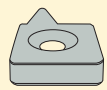		
...20HD	CHD22	T20P-7	L86025-T20P	CN6	KX20-2	CS4009-T15P	S7616
...26HD	CHD27	T20P-7	L86025-T20P	CN6	KX26-2	C05012-T15P	S7616

Accessories, to be ordered separately

For holder	Shim key	Insert shim (K)					
...20HD	T15P-2	KX20-0	KX20-1	KX20-3	KX20-4	KX20-5	KX20-99
...26HD	T15P-2	KX26-0	KX26-1	KX26-3	KX26-4	KX26-5	KX26-99

Please check availability in current price and stock-list

Toolholders for S-inserts

Snap-Tap®

- For inserts programme, see page(s) 92, 94, 97-98, 101-104, 106-107, 109-111, 113, 115, 117-118, 120-123

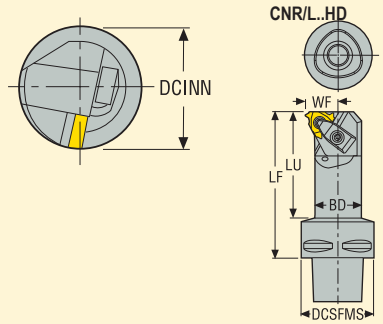

Right-hand version shown

Application	Designation	Dimensions in mm BD	DCSFMS	WF	DCINN	LF	LU	KG	
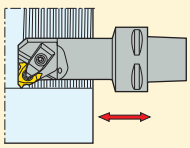	C4-SNR-10060-16	16,0	40,0	10,0	19,0	60,0	37,0	0,3	16..
	C4-CNR-14060-16HD	20,0	40,0	13,8	24,0	60,0	36,0	0,4	16..
	C4-CNR-17070-16HD	25,0	40,0	16,3	29,0	70,0	48,0	0,5	16..
	C4-CNR-20090-16HD	32,0	40,0	19,8	36,0	90,0	69,0	0,7	16..
	C4-CNL-14060-16HD	20,0	40,0	13,8	24,0	60,0	36,0	0,4	16..
	C4-CNL-17070-16HD	25,0	40,0	16,3	29,0	70,0	48,0	0,5	16..
	C4-CNL-20090-16HD	32,0	40,0	19,8	36,0	90,0	69,0	0,7	16..
	C4-CNR-22090-22HD	32,0	40,0	21,3	38,0	90,0	69,0	0,6	22..
	C4-CNL-22090-22HD	32,0	40,0	21,3	38,0	90,0	69,0	0,6	22..

Spare Parts, included in delivery

For holder	Cantilever clamp	Clamp key	Clamp kit	Clamp screw	Insert key	Insert screw	Insert shim (S)	Shim screw	Spring
...10060-16	–	–	–	–	T15P-2	C03508-T15P	–	–	–
...14060, 17070-16HD	–	T15P-2	CSP16HD-T15P	–	–	–	GX16-1	CS3507-T09P	–
...20090-16HD	CHD16	T15P-2	–	L85020-T15P	–	–	GX16-1	CS3507-T09P	S6912
...22090-22HD	–	T15P-2	CSP22HD-T15P	–	–	–	NX22-1	CS4009-T15P	–

Accessories, to be ordered separately

For holder	Shim key	Insert shim (M)	Insert shim (S)										
...10060-16	–	–	–	–	–	–	–	–	–	–	–	–	–
...14060, 17070-16HD	T09P-2	MX16-1	GX16-0	GX16-2	GX16-3	GX16-4	GX16-98	GX16-99	–	–	–	–	–
...20090-16HD	T09P-2	MX16-1	GX16-0	GX16-2	GX16-3	GX16-4	GX16-98	GX16-99	–	–	–	–	–
...22090-22HD	–	MX22-1	NX22-0	NX22-0.5	NX22-1.5	NX22-2	NX22-3	NX22-4	NX22-97.5	NX22-98	NX22-98.5	NX22-99	NX22-99.5

Please check availability in current price and stock-list

Toolholders for S-inserts

Snap-Tap®

- For inserts programme, see page(s) 92, 94, 97-98, 101-104, 106-107, 109-111, 113, 115, 117-118, 120-123

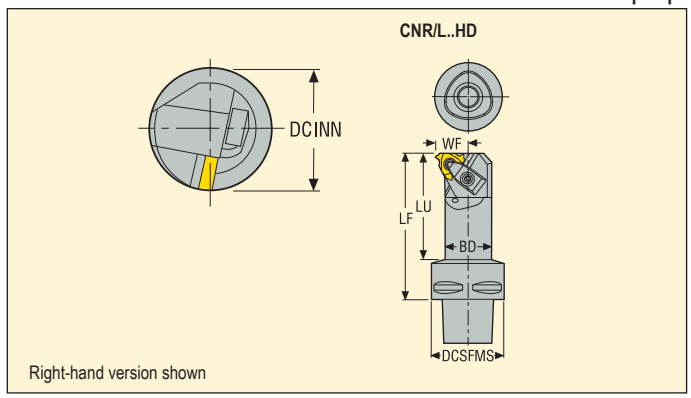

Application	Designation	Dimensions in mm BD	DCSFMS	WF	DCINN	LF	LU	KG	
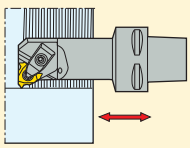	C5-CNR-14060-16HD	20,0	50,0	13,8	24,0	60,0	36,0	0,6	16..
	C5-CNR-17070-16HD	25,0	50,0	16,3	29,0	70,0	47,0	0,6	16..
	C5-CNR-20090-16HD	32,0	50,0	19,8	36,0	90,0	68,0	0,8	16..
	C5-CNL-14060-16HD	20,0	50,0	13,8	24,0	60,0	36,0	0,6	16..
	C5-CNL-17070-16HD	25,0	50,0	16,3	29,0	70,0	47,0	0,6	16..
	C5-CNL-20090-16HD	32,0	50,0	19,8	36,0	90,0	68,0	0,8	16..
	C5-CNR-18070-22HD	25,0	50,0	17,8	30,0	70,0	47,0	0,6	22..
	C5-CNR-22090-22HD	32,0	50,0	21,3	38,0	90,0	68,0	0,8	22..
	C5-CNL-18070-22HD	25,0	50,0	17,8	30,0	70,0	47,0	0,6	22..
	C5-CNL-22090-22HD	32,0	50,0	21,3	38,0	90,0	68,0	0,8	22..
	C5-CNR-26105-27HD	40,0	50,0	24,78	46,0	105,0	83,7	1,2	27..
	C5-CNL-26105-27HD	40,0	50,0	24,78	46,0	105,0	83,7	1,2	27..

Spare Parts, included in delivery

For holder	Cantilever clamp	Clamp key	Clamp kit	Clamp screw	Insert shim (S)	Shim screw	Spring
					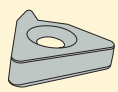		
...14060, 17070-16HD	–	T15P-2	CSP16HD-T15P	–	GX16-1	CS3507-T09P	–
...20090-16HD	CHD16	T15P-2	–	L85020-T15P	GX16-1	CS3507-T09P	S6912
...22HD	–	T15P-2	CSP22HD-T15P	–	NX22-1	CS4009-T15P	–
...27HD	CHD27	T20P-7	–	L86025-T20P	VX27-1	C05012-T15P	S7616

Accessories, to be ordered separately

For holder	Shim key	Insert shim (M)	Insert shim (S)										
...14060, 17070-16HD	T09P-2	MX16-1	GX16-0	GX16-2	GX16-3	GX16-4	GX16-98	GX16-99	–	–	–	–	–
...20090-16HD	T09P-2	MX16-1	GX16-0	GX16-2	GX16-3	GX16-4	GX16-98	GX16-99	–	–	–	–	–
...22HD	T15P-2	MX22-1	NX22-0	NX22-0.5	NX22-1.5	NX22-2	NX22-3	NX22-4	NX22-97.5	NX22-98	NX22-98.5	NX22-99	NX22-99.5
...27HD	T15P-2	MX27-1	VX27-0	VX27-0.5	VX27-1.5	VX27-2	VX27-3	VX27-4	–	VX27-98	VX27-98.5	VX27-99	VX27-99.5

Please check availability in current price and stock-list

Toolholders for S-inserts

Snap-Tap®

- For inserts programme, see page(s) 92, 94, 97-98, 101-104, 106-107, 109-111, 113, 115, 117,121

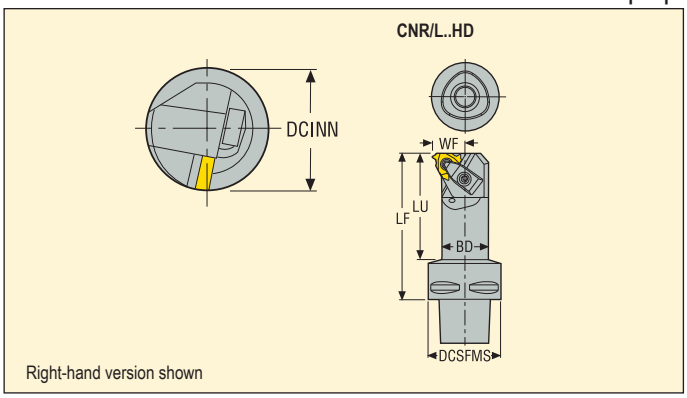

Application	Designation	Dimensions in mm BD	DCSFMS	WF	DCINN	LF	LU	KG	
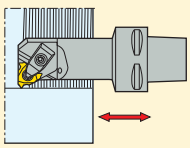	C6-CNR-17075-16HD	25,0	63,0	16,3	29,0	75,0	53,0	0,9	16
	C6-CNR-20090-16HD	32,0	63,0	19,8	36,0	90,0	68,0	1,1	16
	C6-CNR-24105-16HD	40,0	63,0	23,8	44,0	105,0	80,0	1,5	16
	C6-CNL-17075-16HD	25,0	63,0	16,3	29,0	75,0	53,0	0,9	16
	C6-CNL-20090-16HD	32,0	63,0	19,8	36,0	90,0	68,0	1,1	16
	C6-CNL-24105-16HD	40,0	63,0	23,8	44,0	105,0	80,0	1,5	16

Spare Parts, included in delivery

For holder	Cantilever clamp	Clamp key	Clamp kit	Clamp screw	Insert shim (S)	Shim screw	Spring
					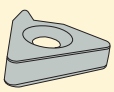		
...17075-16HD	–	T15P-2	CSP16HD-T15P	–	GX16-1	CS3507-T09P	–
...20090, 24105-16HD	CHD16	T15P-2	–	L85020-T15P	GX16-1	CS3507-T09P	S6912

Accessories, to be ordered separately

For holder	Shim key	Insert shim (M)	Insert shim (S)					
...17075-16HD	T09P-2	MX16-1	GX16-0	GX16-2	GX16-3	GX16-4	GX16-98	GX16-99
...20090, 24105-16HD	T09P-2	MX16-1	GX16-0	GX16-2	GX16-3	GX16-4	GX16-98	GX16-99

Please check availability in current price and stock-list

Toolholders for S-inserts

Snap-Tap®

- For inserts programme, see page(s) 92, 94, 97-98, 101-102, 106, 109, 111, 113, 115, 117-118, 120, 122-123

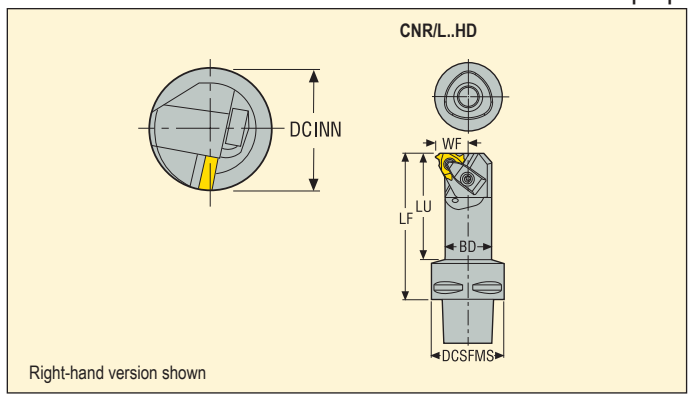

Application	Designation	Dimensions in mm BD	DCSFMS	WF	DCINN	LF	LU	KG	
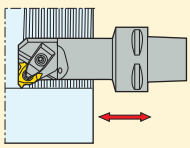	C6-CNR-18075-22HD	25,0	63,0	17,8	30,0	75,0	53,0	0,9	22
	C6-CNR-22090-22HD	32,0	63,0	21,3	38,0	90,0	68,0	1,1	22
	C6-CNR-26105-22HD	40,0	63,0	25,3	46,0	105,0	80,0	1,5	22
	C6-CNL-18075-22HD	25,0	63,0	17,8	30,0	75,0	53,0	0,9	22
	C6-CNL-22090-22HD	32,0	63,0	21,3	38,0	90,0	68,0	1,1	22
	C6-CNL-26105-22HD	40,0	63,0	25,3	46,0	105,0	80,0	1,5	22

Spare Parts, included in delivery

For holder	Cantilever clamp	Clamp key	Clamp kit	Clamp screw	Insert shim (S)	Shim screw	Spring
					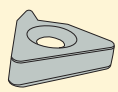		
..18075, 22090..	–	T15P-2	CSP22HD-T15P	–	NX22-1	CS4009-T15P	–
..26105..	CHD22	T20P-7L	–	L86025-T20P	NX22-1	CS4009-T15P	S7616

Accessories, to be ordered separately

For holder	Shim key	Insert shim (M)	Insert shim (S)										
..18075, 22090..	T15P-2	MX22-1	NX22-0	NX22-0.5	NX22-1.5	NX22-2	NX22-3	NX22-4	NX22-97.5	NX22-98	NX22-98.5	NX22-99	NX22-99.5
..26105..	T15P-2	MX22-1	NX22-0	NX22-0.5	NX22-1.5	NX22-2	NX22-3	NX22-4	NX22-97.5	NX22-98	NX22-98.5	NX22-99	NX22-99.5

Please check availability in current price and stock-list

Toolholders for S-inserts

Snap-Tap®

- For inserts programme, see page(s) 97-98, 101, 111, 113, 115, 117-118, 120-121

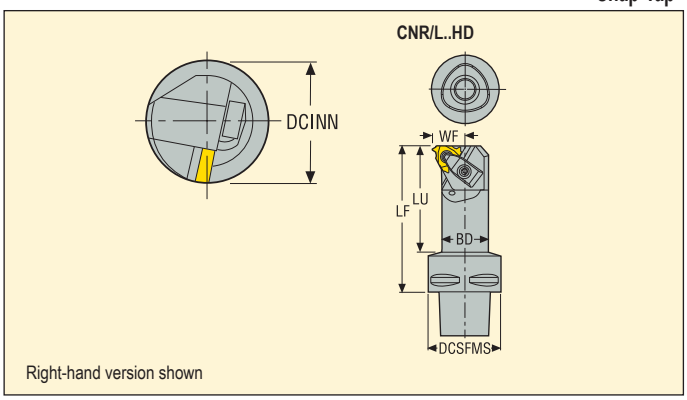

Application	Designation	Dimensions in mm BD	DCSFMS	WF	DCINN	LF	LU	KG	
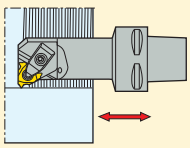	C6-CNR-26105-27HD	40,0	63,0	25,3	46,0	105,0	77,0	1,6	27
	C6-CNR-36182-27HD	63,0	63,0	36,0	70,0	182,0	–	4,1	27
	C6-CNL-26105-27HD	40,0	63,0	25,3	46,0	105,0	77,0	1,6	27
	C6-CNL-36182-27HD	63,0	63,0	36,0	70,0	182,0	–	4,1	27
	C8-CNR-36190-27HD	54,0	80,0	36,0	70,0	190,0	160,0	4,2	27
	C8-CNL-36190-27HD	54,0	80,0	36,0	70,0	190,0	160,0	4,2	27

Spare Parts, included in delivery

For holder	Cantilever clamp	Clamp key	Clamp screw	Coolant nozzle	Insert shim (S)	Shim screw	Spring
					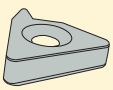		
C6...	CHD27	T20P-7	L86025-T20P	–	VX27-1	C05012-T15P	S7616
C8...	CHD27	T20P-7	L86025-T20P	CN8	VX27-1	C05012-T15P	S7616

Accessories, to be ordered separately

For holder	Shim key	Insert shim (M)	Insert shim (S)									
C6...	T15P-2	MX27-1	VX27-0	VX27-0.5	VX27-1.5	VX27-2	VX27-3	VX27-4	VX27-98	VX27-98.5	VX27-99	VX27-99.5
C8...	T15P-2	MX27-1	VX27-0	VX27-0.5	VX27-1.5	VX27-2	VX27-3	VX27-4	VX27-98	VX27-98.5	VX27-99	VX27-99.5

Please check availability in current price and stock-list

Toolholders for S-inserts

Snap-Tap®

- For inserts programme, see page(s) 92, 94, 97-98, 101-104, 106-107, 109-111, 113, 115, 117-118, 120-123

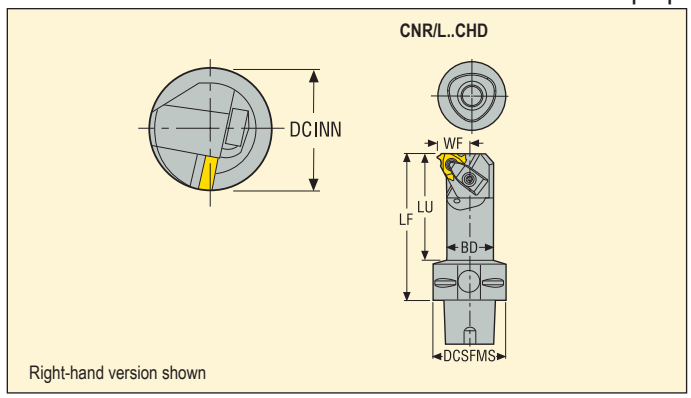

Application	Designation	Dimensions in mm BD	DCSFMS	WF	DCINN	LF	LU	KG	
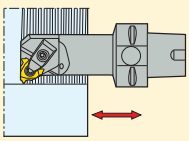	C4-CNR-14060-16CHD	20,0	40,0	13,8	24,0	60,0	36,0	0,4	16
	C4-CNL-14060-16CHD	20,0	40,0	13,8	24,0	60,0	36,0	0,4	16
	C5-CNR-17070-16CHD	25,0	50,0	16,3	29,0	70,0	47,0	0,6	16
	C5-CNR-20090-16CHD	32,0	50,0	19,8	36,0	90,0	68,0	0,8	16
	C5-CNL-17070-16CHD	25,0	50,0	16,3	29,0	70,0	47,0	0,6	16
	C5-CNL-20090-16CHD	32,0	50,0	19,8	36,0	90,0	68,0	0,8	16
	C5-CNR-18070-22CHD	25,0	50,0	17,8	30,0	70,0	47,0	0,6	22
	C5-CNL-18070-22CHD	25,0	50,0	17,8	30,0	70,0	47,0	0,6	22

Spare Parts, included in delivery

For holder	Cantilever clamp	Clamp key	Clamp kit	Clamp screw	Insert shim (S)	Shim screw	Spring
					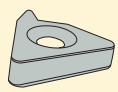		
...14060, ...17070-16CHD	–	T15P-2	CSP16HD-T15P	–	GX16-1	CS3507-T09P	–
...20090-16CHD	CHD16	T15P-2	–	L85020-T15P	GX16-1	CS3507-T09P	S6912
...18070-22CHD	–	T15P-2	CSP22HD-T15P	–	NX22-1	CS4009-T15P	–

Accessories, to be ordered separately

For holder	Shim key	Insert shim (M)	Insert shim (S)										
...14060, ...17070-16CHD	T09P-2	MX16-1	GX16-0	GX16-2	GX16-3	GX16-4	GX16-98	GX16-99	–	–	–	–	–
...20090-16CHD	T09P-2	MX16-1	GX16-0	GX16-2	GX16-3	GX16-4	GX16-98	GX16-99	–	–	–	–	–
...18070-22CHD	–	MX22-1	NX22-0	NX22-0.5	NX22-1.5	NX22-2	NX22-3	NX22-4	NX22-97.5	NX22-98	NX22-98.5	NX22-99	NX22-99.5

Please check availability in current price and stock-list

Toolholders for S-inserts

Snap-Tap®

- For inserts programme, see page(s) 92, 94, 97-98, 101-104, 106-107, 109-111, 113, 115, 117-118, 120-123

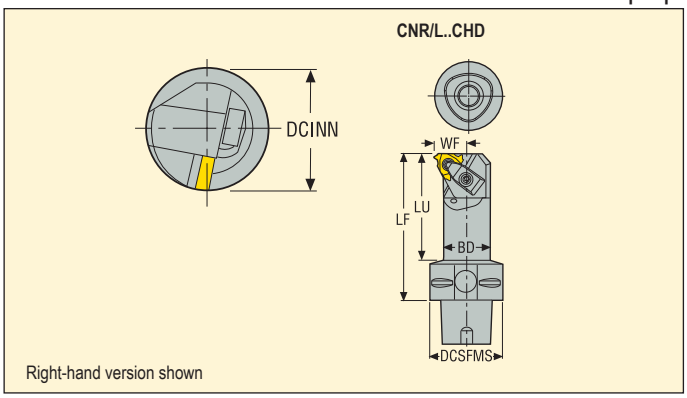

Application	Designation	Dimensions in mm BD	DCSFMS	WF	DCINN	LF	LU	KG	
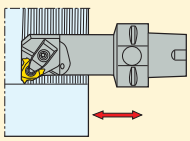	C6-CNR-20090-16CHD	32,0	63,0	19,8	36,0	90,0	68,0	1,1	16
	C6-CNR-24105-16CHD	40,0	63,0	23,8	44,0	105,0	80,0	1,5	16
	C6-CNL-20090-16CHD	32,0	63,0	19,8	36,0	90,0	68,0	1,1	16
	C6-CNL-24105-16CHD	40,0	63,0	23,8	44,0	105,0	80,0	1,5	16
	C6-CNR-22090-22CHD	32,0	63,0	21,3	38,0	90,0	68,0	1,1	22
	C6-CNR-26105-22CHD	40,0	63,0	25,3	46,0	105,0	80,0	1,5	22
	C6-CNL-22090-22CHD	32,0	63,0	21,3	38,0	90,0	68,0	1,1	22
	C6-CNL-26105-22CHD	40,0	63,0	25,3	46,0	105,0	80,0	1,5	22

Spare Parts, included in delivery

For holder	Cantilever clamp	Clamp key	Clamp kit	Clamp screw	Insert shim (S)	Shim screw	Spring
					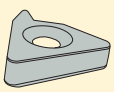		
...16CHD	CHD16	T15P-2	–	L85020-T15P	GX16-1	CS3507-T09P	S6912
...22090-22CHD	–	T15P-2	CSP22HD-T15P	–	NX22-1	CS4009-T15P	–
...26105-22CHD	CHD22	T20P-7L	–	L86025-T20P	NX22-1	CS4009-T15P	S7616

Accessories, to be ordered separately

For holder	Shim key	Insert shim (M)	Insert shim (S)										
...16CHD	T09P-2	MX16-1	GX16-0	GX16-2	GX16-3	GX16-4	GX16-98	GX16-99	–	–	–	–	–
...22090-22CHD	T15P-2	MX22-1	NX22-0	NX22-0.5	NX22-1.5	NX22-2	NX22-3	NX22-4	NX22-97.5	NX22-98	NX22-98.5	NX22-99	NX22-99.5
...26105-22CHD	T15P-2	MX22-1	NX22-0	NX22-0.5	NX22-1.5	NX22-2	NX22-3	NX22-4	NX22-97.5	NX22-98	NX22-98.5	NX22-99	NX22-99.5

Please check availability in current price and stock-list

Toolholders for S-inserts

Snap-Tap®

- For inserts programme, see page(s) 97-98, 101, 111, 113, 115, 117-118, 120-121

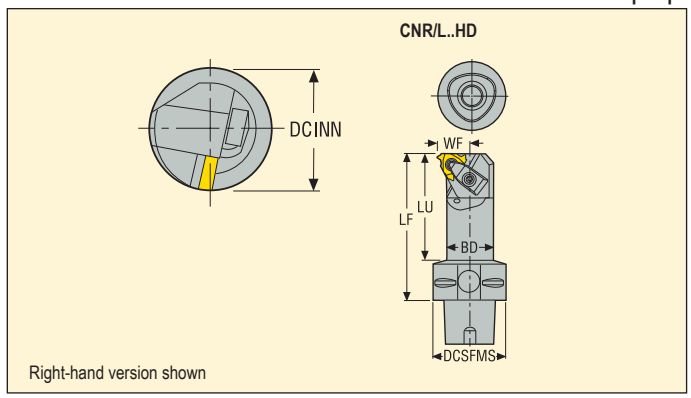

Application	Designation	Dimensions in mm BD	DCSFMS	WF	DCINN	LF	LU	KG	
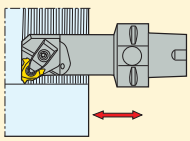	C6-CNR-26105-27CHD	40,0	63,0	25,3	46,0	105,0	80,0	1,5	27
	C6-CNR-36182-27CHD	63,0	63,0	36,0	70,0	182,0	–	4,1	27
	C6-CNL-26105-27CHD	40,0	63,0	25,3	46,0	105,0	80,0	1,5	27
	C6-CNL-36182-27CHD	63,0	63,0	36,0	70,0	182,0	–	4,1	27

Spare Parts, included in delivery

For holder	Cantilever clamp	Clamp key	Clamp screw	Insert shim (S)	Shim screw	Spring
	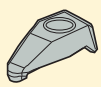			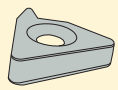		
C6...	CHD27	T20P-7	L86025-T20P	VX27-1	C05012-T15P	S7616

Accessories, to be ordered separately

For holder	Shim key	Insert shim (M)	Insert shim (S)									
C6...	T15P-2	MX27-1	VX27-0	VX27-0.5	VX27-1.5	VX27-2	VX27-3	VX27-4	VX27-98	VX27-98.5	VX27-99	VX27-99.5

Please check availability in current price and stock-list

Toolholders for S-inserts

Snap-Tap®

- For inserts programme, see page(s) 92, 94, 97-98, 101-104, 106-107, 109-111, 113, 115, 117, 121

* Max coolant pressure (bar)

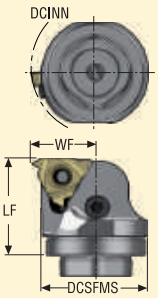

Right-hand version shown

Application	Designation	Dimensions in mm DCSFMS	LF	WF	DCINN	CP*	KG	
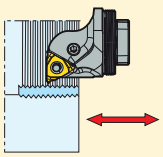	GL25-PNR-17025-16AHDJET	25,0	25,0	16,3	29,0	200,0	0,2	16
	GL25-PNL-17025-16AHDJET	25,0	25,0	16,3	29,0	200,0	0,1	16
	GL32-PNR-20032-16AHDJET	32,0	32,0	19,8	36,0	200,0	0,2	16
	GL32-PNL-20032-16AHDJET	32,0	32,0	19,8	36,0	200,0	0,2	16
	GL40-PNR-24032-16AHDJET	40,0	32,0	23,8	44,0	200,0	0,4	16
	GL40-PNL-24032-16AHDJET	40,0	32,0	23,8	44,0	200,0	0,3	16
	GL50-PNR-29032-16AHDJET	50,0	32,0	28,8	54,0	200,0	0,5	16
	GL50-PNL-29032-16AHDJET	50,0	32,0	28,8	54,0	200,0	0,5	16

Spare Parts, included in delivery

For holder	Insert lever	Insert shim (S)	Key (T-handle)	Lever screw	Locking key	Shim pin
..16..	PP3712	GXA16-1	DOUBLE-T	LS0612-T15P	H4B-T15P	AC4625

Accessories, to be ordered separately

For holder	Insert shim (M)	Insert shim (S)					
..16..	MXA16-1	GXA16-0	GXA16-2	GXA16-3	GXA16-4	GXA16-98	GXA16-99

Please check availability in current price and stock-list

Toolholders for S-inserts

Snap-Tap®

- For inserts programme, see page(s) 92, 94, 97-98, 101-102, 106, 109, 111, 113, 115, 117-118, 120-123

* Max coolant pressure (bar)

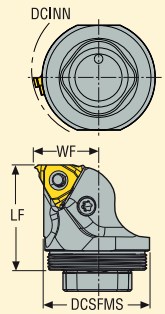

Right-hand version shown

Application	Designation	Dimensions in mm DCSFMS	LF	WF	DCINN	CP*	KG	
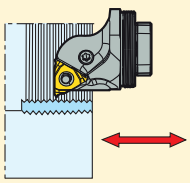	GL32-PNR-22032-22AHDJET	32,0	32,0	21,3	38,0	200,0	0,2	22
	GL32-PNL-22032-22AHDJET	32,0	32,0	21,3	38,0	200,0	0,1	22
	GL40-PNR-26032-22AHDJET	40,0	32,0	25,3	46,0	200,0	0,3	22
	GL40-PNL-26032-22AHDJET	40,0	32,0	25,3	46,0	200,0	0,3	22
	GL50-PNR-31032-22AHDJET	50,0	32,0	30,3	56,0	200,0	0,4	22
	GL50-PNL-31032-22AHDJET	50,0	32,0	30,3	56,0	200,0	0,5	22
	GL40-PNR-27037-27AHDJET	40,0	37,0	26,8	48,0	200,0	0,3	27
	GL50-PNR-32037-27AHDJET	50,0	37,0	31,8	58,0	200,0	0,3	27

Spare Parts, included in delivery

For holder	Insert lever	Insert shim (S)	Key (T-handle)	Lever screw	Locking key	Shim pin
				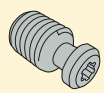		
..22A..	PP4816	NXA22-1	DOUBLE-T	LS0815-T25P	H6B-T25P	AC5035
..27A..	PP6019	VXA27-1	DOUBLE-T	LS0820-T25P	H6B-T25P	AC6050

Accessories, to be ordered separately

For holder	Insert shim (M)	Insert shim (S)											
..22A..	MXA22-1	NXA22-0	NXA22-0.5	NXA22-1	NXA22-1.5	NXA22-2	NXA22-3	NXA22-4	NXA22-97.5	NXA22-98	NXA22-98.5	NXA22-99	NXA22-99.5
..27A..	MXA27-1	VXA27-0	VXA27-0.5	VXA27-1	VXA27-1.5	VXA27-2	VXA27-3	VXA27-4	–	VXA27-98	VXA27-98.5	VXA27-99	VXA27-99.5

Please check availability in current price and stock-list

Toolholders for K-inserts

Snap-Tap®

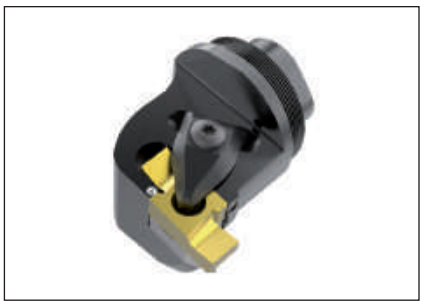

- For inserts programme, see page(s) 91-94, 113, 115, 117
- * Max coolant pressure (bar)

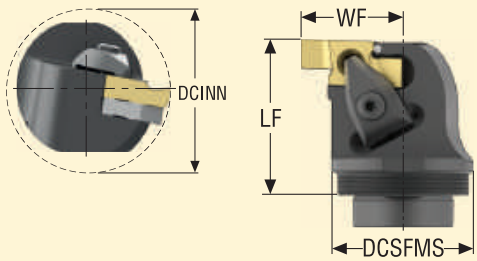

Right-hand version shown

Application	Designation	Dimensions in mm				CP*	KG	
		DCSFMS	DCINN	LF	WF			
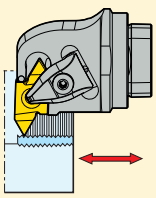	GL50-CNR-36055-26AHD	50,0	65,0	55,0	36,0	200,0	0,6	26 NR..

Spare Parts, included in delivery

For holder	Cantilever clamp	Clamp screw	Insert shim (K)	Shim screw	Spring
			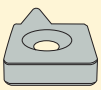		
GL50...	CHD27	L86025-T20P	KX26-2	C05012-T15P	S7616

Accessories, to be ordered separately

For holder	Shim key	Insert shim (K)					
GL50...	T15P-2	KX26-0	KX26-1	KX26-3	KX26-4	KX26-5	KX26-99

Please check availability in current price and stock-list

Toolholders for S-inserts

Snap-Tap®

- For inserts programme, see page(s) 91, 93, 95-96, 99-100, 103-105, 107-108, 110-112, 114, 116, 121
- For Technical Guide, please see MN Turning

QC..-PER/L-HDJET

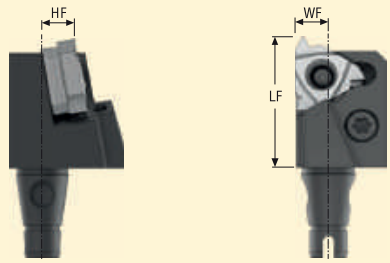

Right-hand version shown

Application	QC size	Designation	Dimensions in mm WF	LF	HF	CP*	KG	
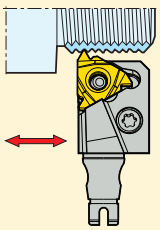								
	QC12	QC12-PER-16HDJET	6,0	25,0	5,975	200,0	0,1	16
	QC12	QC12-PEL-16HDJET	6,0	25,0	5,975	200,0	0,1	16
	QC16	QC16-PER-16HDJET	8,0	25,0	7,900	200,0	0,1	16
	QC16	QC16-PEL-16HDJET	8,0	25,0	7,900	200,0	0,1	16

Spare Parts, included in delivery

For holder	Insert lever	Insert shim (S)	Lever key	Lever screw	Shim pin
				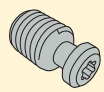	
QC12/16	PP3712	GXA16-1	T15P-2	LS0612-T15P	AC4625

Accessories*

For holder	Torque key	Insert shim (M)	Insert shim (S)					
QC12/16	T00-15P30	MXA16-1	GXA16-0	GXA16-2	GXA16-3	GXA16-4	GXA16-98	GXA16-99

Please check availability in current price and stock-list

Toolholders for S-inserts

Snap-Tap®

- For inserts programme, see page(s) 91, 93, 95-96, 99-100, 103-105, 107-108, 110-112, 114, 116, 118-119, 121-123

CER-..HD

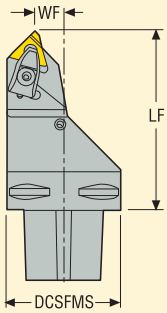

Right-hand version shown

Application	Designation	Dimensions in mm DCSFMS	LF	WF	KG	
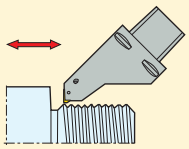	C6-CER-18100-16HD	63,0	100,0	18,0	1,6	16
	C6-CER-16100-22HD	63,0	100,0	16,0	1,6	22
	C6-CER-12100-27HD	63,0	100,0	12,0	1,6	27

Spare Parts, included in delivery

For holder	Cantilever clamp	Clamp key	Clamp screw	Coolant nozzle	Insert shim (S)	Shim screw	Spring
					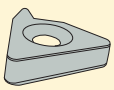		
...16HD	CHD16	T15P-7	L85020-T15P	CN8	GX16-1	CS3507-T09P	S6912
...22HD	CHD22	T20P-7L	L86025-T20P	CN8	NX22-1	CS4009-T15P	S7616
...27HD	CHD27	T20P-7L	L86025-T20P	CN3	VX27-1	C05012-T15P	S7616

Accessories, to be ordered separately

For holder	Shim key	Insert shim (M)	Insert shim (S)										
...16HD	T09P-2	MX16-1	GX16-0	GX16-2	GX16-3	GX16-4	GX16-98	GX16-99	–	–	–	–	–
...22HD	T15P-2	MX22-1	NX22-0	NX22-0.5	NX22-1.5	NX22-2	NX22-3	NX22-4	NX22-97.5	NX22-98	NX22-98.5	NX22-99	NX22-99.5
...27HD	T15P-2	MX27-1	VX27-0	VX27-0.5	VX27-1.5	VX27-2	VX27-3	VX27-4	–	VX27-98	VX27-98.5	VX27-99	VX27-99.5

Please check availability in current price and stock-list

Toolholders for K-inserts

Snap-Tap®

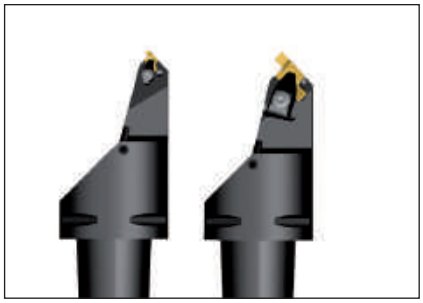

- For inserts programme, see page(s) 91-94, 112, 114, 116

CEL-..HD

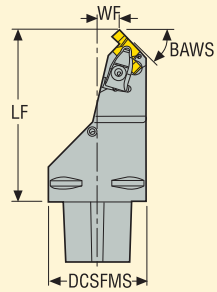

Left-hand version shown

Application	Designation	Dimensions in mm DCSFMS	LF	WF	BAWS°	KG	
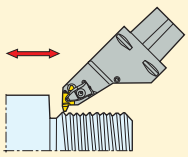	C6-CEL-14110-20HD	63,0	110,0	14,0	45,0	1,7	20..
	C6-CEL-07110-26HD	63,0	110,0	7,0	45,0	1,7	26..

Spare Parts, included in delivery

For holder	Cantilever clamp	Clamp key	Clamp screw	Coolant nozzle	Insert shim (K)	Shim screw	Spring
					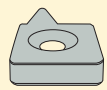		
-20HD	CHD22	T20P-7	L86025-T20P	CN8	KX20-2	CS4009-T15P	S7616
-26HD	CHD27	T20P-7	L86025-T20P	CN8	KX26-2	C05012-T15P	S7616

Accessories, to be ordered separately

For holder	Shim key	Insert shim (K)					
-20HD	T15P-2	KX20-0	KX20-1	KX20-3	KX20-4	KX20-5	KX20-99
-26HD	T15P-2	KX26-0	KX26-1	KX26-3	KX26-4	KX26-5	KX26-99

Please check availability in current price and stock-list

Toolholder for peeling

• For inserts programme, see page(s) 81

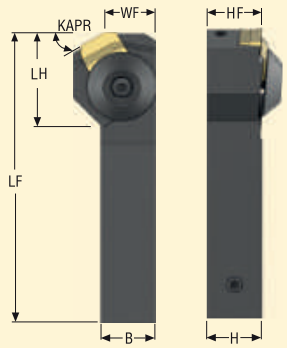

Right-hand version shown

Application	Designation	Dimensions in mm						KAPR°	KG	
		B	WF	H	LF	LH	HF			
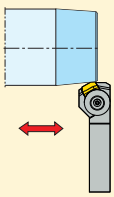	CSXCR3232P25-R30	32,0	29,53	32,0	170,0	64,61	32,0	30,0	0,5	SCNN-R30

Spare Parts, included in delivery

For holder	Anvil screw	Chipbreaker	Insert screw	Key	Key (T-handle)	Plug	Shim
		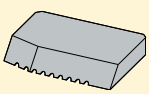					
CSXCR...	CA4012	PS2518	W400820-T30P	H6B-T30PL	DOUBLE-T	JET-P1/8-5MM	SSN250630

Please check availability in current price and stock-list

Toolholder for pipe-facing

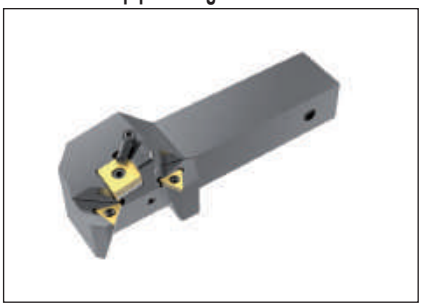

- For inserts programme, see MN Turning

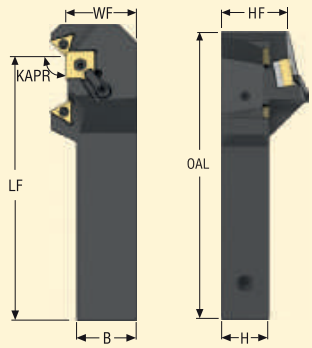

Right-hand version shown

Application	Designation	Dimensions in mm						KAPR°	KG	
		B	WF	H	LF	HF	OAL			
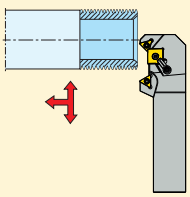	MSGNR3240R19-TC-45-60	40,0	47,0	32,0	174,0	32,0	195,6	90,0	0,7	SN...1906... TCMT16T3...

Spare Parts, included in delivery

For holder	Cantilever clamp	Clamp screw	Insert key	Insert screw	Insert shim	Key	Key (T-handle)	Plug	Shim pin
		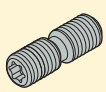			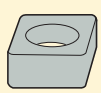				
MSGNR...	MC22	LD6024-T20P	H4B-T15P	C03508-T15P	SSN190412	H6B-T20P	DOUBLE-T	JET-P1/8-5MM	MN1920-T20P

Please check availability in current price and stock-list

SCNN

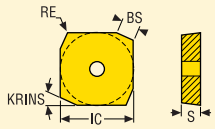

Size	Dimensions in mm IC	S
25	25,0	6,35

Dimensions in mm RE	BS	KRINS°	Designation	Grades Coated TP250T		
4,0	6,2	23,0	SCNN250640-R25	■		
4,0	6,6	28,0	SCNN250640-R30	■		

■ Stock standard
Subject to change refer to current price- and stock-list

Toolholders for inserts SNMA, SNMG, SNMM / CNMA, CNMG, CNMM

- For inserts programme, see MN Turning
- GAMO° = Rake angle, LAMS° = Inclination angle

C.-DSKNR/L - PCLNR/L

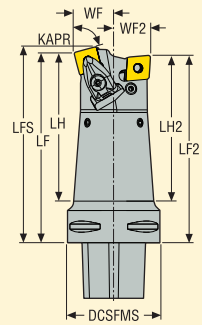

Right-hand version shown
KAPR = 75°

C.-DSKNR/L - CLNR/L 75°

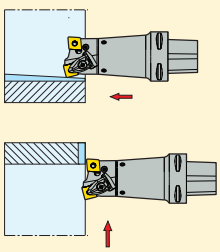

Seco-Capto size		Designation	Dimensions in mm DCSFMS	LF	LF2	LFS	LH	LH2	WF	WF2	GAMO°	LAMS°	KG	
C6														
	15/16	C6-DSKNR2713015-PCLNL2512816	63	130	128	134	101,5	99,5	27	25	-5	-10	0,9	SN..1506.. CN..1606..
		C6-DSKNL2713015-PCLNR2512816C	63	130	128	134	101,5	99,5	27	25	-5	-10	2,3	SN..1506.. CN..1606..

Spare Parts, Parts included in delivery

For size	Clamp	Clamp pin	Clamp screw	Insert shim	Lever pin	Lever screw	Shim pin	Shim screw	Spring
C6	CD16-S	FP2012	L86026-T20P	PCN160412	PP6017	LS0820	RP8286	C05010-T20P	S7010

Accessories*

Clamp kit	Key	Lever key
CD16-S16	T20P-7L	3SMS795

Please check availability in current price and stock-list

* To be ordered separately

Toolholders for inserts SNMA, SNMG, SNMM / CNMA, CNMG, CNMM

- For inserts programme, see MN Turning
- GAMO° = Rake angle, LAMS° = Inclination angle

C.-MSKNR/L - PCLNR/L

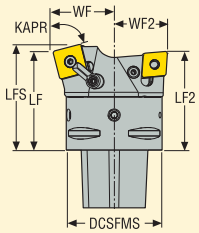

Right-hand version shown
KAPR = 75°

C.-MSKNR/L - PCLNR/L 75°

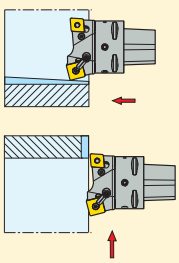

Seco-Capto size		Designation	Dimensions in mm DCSFMS	LF	LF2	LFS	WF	WF2	GAMO°	LAMS°	KG	
C6												
	19/16	C6-MSKNR4006519-PCLNL3506516	63	65	65	69,8	40	35	-5	-10	0,7	SN..1906.. CN..1606..
		C6-MSKNL4006519-PCLNR3506516C	63	65	65	69,8	40	35	-5	-10	1,5	SN..1906.. CN..1606..
C8												
	19/16	C8-MSKNR4508019-PCLNL4508016	80	80	80	85,0	45	45	-5	-10	3,3	SN..1906.. CN..1606..
		C8-MSKNL4508019-PCLNR4508016C	80	80	80	85,0	45	45	-5	-10	3,3	SN..1906.. CN..1606..

Spare Parts, Parts included in delivery

For size	Clamp	Coolant nozzle	Insert shim	Lever pin	Lever screw	Pin	Screw	Shim pin
C6/C8	MC22	CN6	SSN190412	PP6017	LS0820	MN1920-T20P	LD6024-T20P	RP8286

Accessories*

Key	Lever key
T20P-7L	3SMS795

Please check availability in current price and stock-list

* To be ordered separately

Toolholders for chasers

Snap-Tap®

- For inserts programme, see page(s) 124

CER

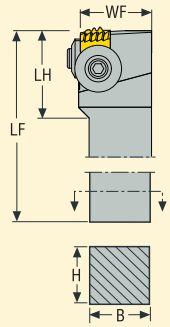

Right-hand version shown

Application	Designation	Dimensions in mm B	WF	H	LF	LH	KG	INSL
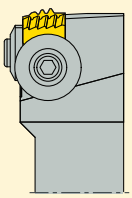	CER3232P1-X	32,0	37,25	32,0	170,24	47,54	1,4	15.875
	CER3232P5-X	32,0	37,25	32,0	170,24	47,54	1,4	25.000

Spare Parts, included in delivery

For holder	Clamp kit side	Clamp kit top	Key, side clamp	Key, top clamp
...X	W200613-T20P	W240618-T25P	T20P-7	T25P-7

Please check availability in current price and stock-list

Toolholders for chasers, external

Snap-Tap®

• For inserts programme, see page(s) 124

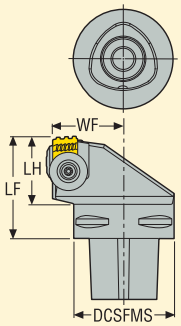

Right-hand version shown

Application	Designation	Dimensions in mm DCSFMS	WF	LF	KG	INSL
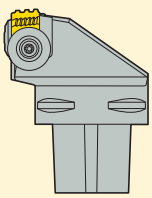	C6-CER-45065-1-X	63,0	45,0	65,0	1,3	15.875
	C6-CER-45065-5-X	63,0	45,0	65,0	1,4	25.000
	C8-CER-55080-1-X	80,0	55,0	80,0	2,7	15.875
	C8-CER-55080-5-X	80,0	55,0	80,0	2,8	25.000

Spare Parts, included in delivery

For holder	Clamp kit side	Clamp kit top	Key, side clamp	Key, top clamp
C6/C8-X	W200613-T20P	W240618-T25P	T20P-7	T25P-7

Please check availability in current price and stock-list

Toolholders for chasers, internal

Snap-Tap®

• For inserts programme, see page(s) 124

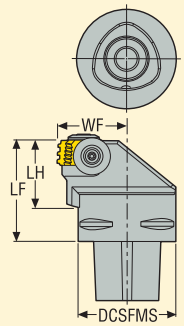

Right-hand version shown

Application	Designation	Dimensions in mm DCSFMS	WF	LF	KG	INSL
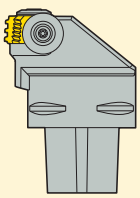	C6-CNR-45065-1-X	63,0	45,0	65,0	1,4	15.875
	C6-CNR-45065-5-X	63,0	45,0	65,0	1,4	25.000
	C8-CNR-55080-1-X	80,0	55,0	80,0	2,9	15.875
	C8-CNR-55080-5-X	80,0	55,0	80,0	2,9	25.000
	C8-CNL-55080-1-X	80,0	55,0	80,0	1,9	15.875
	C8-CNL-55080-5-X	80,0	55,0	80,0	1,7	25.000

Spare Parts, included in delivery

For holder	Clamp kit side	Clamp kit top	Coolant nozzle	Key, side clamp	Key, top clamp
C6/C8...	W200613-T20P	W240618-T25P	CN6	T20P-7	T25P-7

Please check availability in current price and stock-list

Toolholders for chasers, internal

Snap-Tap®

• For inserts programme, see page(s) 124

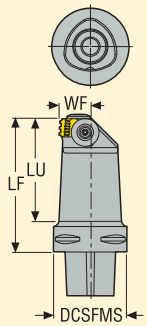

Right-hand version shown

Application	Designation	Dimensions in mm DCSFMS	WF	LF	LU	KG	INSL
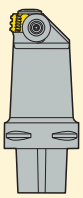	C6-CNR-27115-1-X	63,0	27,0	115,0	88,0	1,9	15.875
	C6-CNR-27115-5-X	63,0	27,0	115,0	88,0	1,9	25.000

Spare Parts, included in delivery

For holder	Clamp kit side	Clamp kit top	Coolant nozzle	Key, side clamp	Key, top clamp
C6...	W200613-T20P	W240618-T25P	CN6	T20P-7	T25P-7

Please check availability in current price and stock-list

Toolholders for chasers, internal

Snap-Tap®

• For inserts programme, see page(s) 124

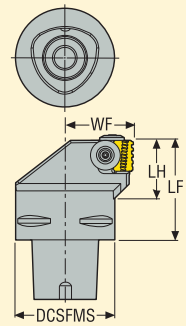

Left-hand version shown

Application	Designation	Dimensions in mm DCSFMS	WF	LF	KG	INSL
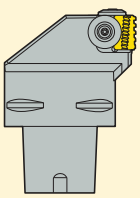	C6-CNL-45065-1C-X	63,0	45,0	65,0	1,4	15.875
	C6-CNL-45065-5C-X	63,0	45,0	65,0	1,4	25.000
	C8-CNL-55080-1C-X	80,0	55,0	80,0	2,9	15.875
	C8-CNL-55080-5C-X	80,0	55,0	80,0	2,9	25.000

Spare Parts, included in delivery

For holder	Clamp kit side	Clamp kit top	Coolant nozzle	Key, side clamp	Key, top clamp
C6/C8...	W200613-T20P	W240618-T25P	CN6	T20P-7	T25P-7

Please check availability in current price and stock-list

Toolholders for chasers, internal

Snap-Tap®

• For inserts programme, see page(s) 124

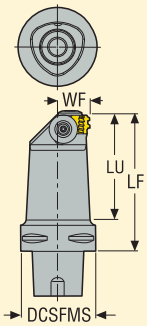

Left-hand version shown

Application	Designation	Dimensions in mm				KG	INSL
		DCSFMS	WF	LF	LH		
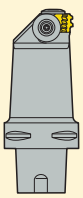	C6-CNL-27115-1C-X	63,0	27,0	115,0	88,0	1,9	15.875
	C6-CNL-27115-5C-X	63,0	27,0	115,0	88,0	1,9	25.000

Spare Parts, included in delivery

For holder	Clamp kit side	Clamp kit top	Coolant nozzle	Key, side clamp	Key, top clamp
C6...	W200613-T20P	W240618-T25P	CN6	T20P-7	T25P-7

Please check availability in current price and stock-list

Toolholders for chasers, internal

Snap-Tap®

• For inserts programme, see page(s) 124

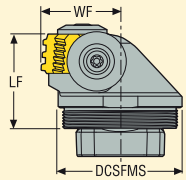

Right-hand version shown

Application	Designation	Dimensions in mm DCSFMS	LF	WF	KG	INSL
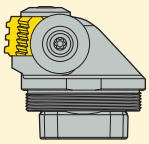	GL50-CNR-32035-9-I	50,0	35,0	32,0	0,4	12.700
	GL50-CNR-32038-1-X	50,0	38,0	32,0	0,4	15.875
	GL50-CNR-32044-5-X	50,0	44,0	32,0	0,5	25.000
	GL50-CNL-32035-9-I	50,0	35,0	32,0	0,5	12.700
	GL50-CNL-32038-1-X	50,0	38,0	32,0	0,5	15.875
	GL50-CNL-32044-5-X	50,0	44,0	32,0	0,5	25.000

Spare Parts, Parts included in delivery

For holder	Clamp kit side	Clamp kit top	Key, clamp	Key, side clamp	Key, top clamp	Key (T-handle)
...9-1	W200613-T20P	W200613-T20P	H6B-T20P	–	–	DOUBLE-T
...1-X, ...5-X	W200613-T20P	W240618-T25P	–	H6B-T20P	H6B-T25P	DOUBLE-T

Please check availability in current price and stock-list

Partial Profile 55° – External Threading

Snap-Tap®

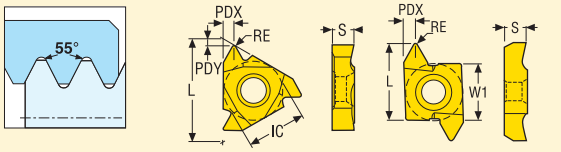

Size	Dimensions in mm IC	W1	L	S
16	9,525	–	16,5	3,47
22	12,7	–	22,0	4,71
26	–	15,875	26,0	7,88

16Ex/22Ex

16ER..A

16ER..A1

16ER..A2

26ER/26NR..

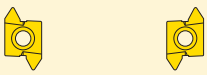

16V55*

Pitch mm	Pitch TPI	Dimensions in mm PDY	PDX	RE	Insert Part No. Right	Grades Coated CP200	CP300	CP500	TTP2050	Uncoated H15			Insert Part No. Left	Grades Coated CP200	CP300	CP500	TTP2050	Uncoated H15		
0,5-1,5	48,0-16,0	0,6	0,8	0,08	16ERA55			■					16ELA55			■				
0,5-3,0	48,0-8,0	1,1	1,5	0,08	16ERAG55	■		■		■			16ELAG55			■				
1,75-3,0	14,0-8,0	1,1	1,5	0,2	16ERG55	■		■					16ELG55			■				
3,5-5,0	7,0-5,0	1,8	2,5	0,4	22ERN55			■		■			22ELN55			■				
0,5-3,0	48,0-8,0	1,1	1,5	0,08	16ERAG55-A			■	■											
1,75-3,0	14,0-8,0	1,2	1,5	0,2	16ERG55-A			■	■											
0,5-3,0	48,0-8,0	1,1	1,5	0,08	16ERAG55-A1			■												
1,75-3,0	14,0-8,0	1,2	1,5	0,2	16ERG55-A1			■												
0,5-3,0	48,0-8,0	1,1	1,5	0,08	16ERAG55-A2			■												
1,75-3,0	14,0-8,0	1,2	1,5	0,2	16ERG55-A2			■												
5,5-10,0	4,5-2,5	–	5,0	0,7	26ERK55		■	■					26NRK55			■				
–	–	–	–	–	16V55			■												

■ **Stock standard**
Subject to change refer to current price- and stock-list

* Toolset contents:
3 pcs 16ERG55, CP500, 3 pcs 16NRG55, CP500,
2 pcs 16ERA55, CP500 and 2 pcs 16NRA55, CP500

Partial Profile 55° – Internal Threading

Snap-Tap®

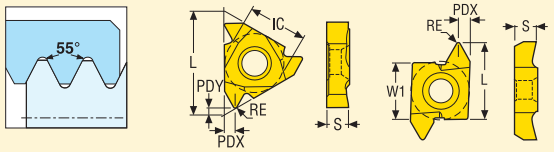

Size	Dimensions in mm IC	W1	L	S
09	5,56	–	9,6	2,4
11	6,35	–	11,0	3,0
16	9,525	–	16,5	3,47
22	12,7	–	22,0	4,71
26	–	15,875	26,0	7,88

09NR/11Nx/16Nx/22Nx..

16NR..A

16NR..A1

16NR..A2

26ER/26NR..

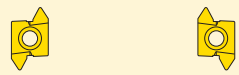

Pitch mm	Pitch TPI	Dimensions in mm PDY	PDX	RE	Insert Part No. Right	Grades Coated CP200	CP300	CP500	TTP2050	Uncoated H15			Insert Part No. Left	Grades Coated CP200	CP300	CP500	TTP2050	Uncoated H15		
0,5-1,5	48,0-16,0	0,7	0,8	0,08	09NRA55			■												
0,5-1,5	48,0-16,0	0,6	0,8	0,08	11NRA55			■		■			11NLA55			■				
0,5-1,5	48,0-16,0	0,6	0,8	0,08	16NRA55			■		■			16NLA55			■				
0,5-3,0	48,0-8,0	1,1	1,5	0,08	16NRAG55	■		■					16NLAG55			■				
1,75-3,0	14,0-8,0	1,1	1,5	0,2	16NRG55	■		■					16NLG55			■				
3,5-5,0	7,0-5,0	1,8	2,5	0,4	22NRN55			■		■			22NLN55			■				
0,5-3,0	48,0-8,0	1,1	1,5	0,08	16NRAG55-A			■	■											
1,75-3,0	14,0-8,0	1,1	1,5	0,2	16NRG55-A			■	■											
0,5-3,0	48,0-8,0	1,1	1,5	0,08	16NRAG55-A1			■												
1,75-3,0	14,0-8,0	1,1	1,5	0,2	16NRG55-A1			■												
0,5-3,0	48,0-8,0	1,1	1,5	0,08	16NRAG55-A2			■												
1,75-3,0	14,0-8,0	1,1	1,5	0,2	16NRG55-A2			■												
5,5-10,0	4,5-2,5	–	5,0	0,7	26NRK55			■					26ERK55		■	■				

■ Stock standard
Subject to change refer to current price- and stock-list

Partial Profile 60° – External Threading

Snap-Tap®

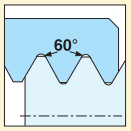

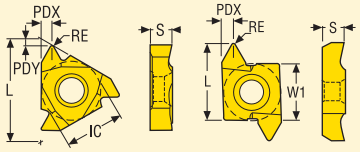

Size	Dimensions in mm IC	W1	L	S
16	9,525	–	16,5	3,47
22	12,7	–	22,0	4,71
26	–	15,875	26,0	7,88

16Ex/22Ex.. 16ER..A 16ER..A1 16ER..A2 26ER/26NR.. 16V60*

Pitch mm	Pitch TPI	Dimensions in mm PDY	PDX	RE	Insert Part No. Right	Grades Coated CP200	CP300	CP500	TTP2050	Uncoated H15			Insert Part No. Left	Grades Coated CP200	CP300	CP500	TTP2050	Uncoated H15		
0,5-1,5	48,0-16,0	0,6	0,8	0,08	16ERA60	■		■		■			16ELA60			■				
0,5-3,0	48,0-8,0	1,1	1,5	0,08	16ERAG60	■		■		■			16ELAG60			■				
1,75-3,0	14,0-8,0	1,1	1,5	0,18	16ERG60	■		■		■			16ELG60			■				
3,5-5,0	7,0-5,0	1,8	2,5	0,4	22ERN60	■	■	■		■			22ELN60			■				
0,5-1,5	48,0-16,0	0,6	0,8	0,08	16ERA60-A			■	■											
0,5-3,0	48,0-8,0	1,1	1,5	0,08	16ERAG60-A			■	■											
1,75-3,0	14,0-8,0	1,2	1,5	0,18	16ERG60-A			■	■											
0,5-1,5	48,0-16,0	0,6	0,8	0,08	16ERA60-A1			■												
0,5-3,0	48,0-8,0	1,1	1,5	0,08	16ERAG60-A1			■												
1,75-3,0	14,0-8,0	1,2	1,5	0,18	16ERG60-A1			■												
0,5-1,5	48,0-16,0	0,6	0,8	0,08	16ERA60-A2			■												
0,5-3,0	48,0-8,0	1,1	1,5	0,08	16ERAG60-A2			■												
1,75-3,0	14,0-8,0	1,2	1,5	0,18	16ERG60-A2			■												
5,5-10,0	4,5-2,5	–	5,0	0,4	26ERK60		■	■					26NRK60		■	■				
–	–	–	–	–	16V60			■												

■ Stock standard
Subject to change refer to current price- and stock-list

* Toolset contents:
3 pcs 16ERG60, CP500, 3 pcs 16NRG60, CP500,
2 pcs 16ERA60, CP500 and 2 pcs 16NRA60, CP500

Partial Profile 60° – Internal Threading

Snap-Tap®

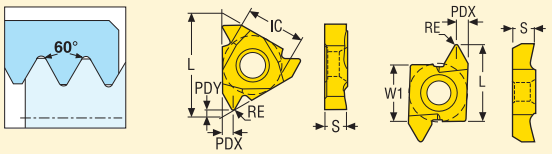

Size	Dimensions in mm IC	W1	L	S
09	5,56	–	9,6	2,4
11	6,35	–	11,0	3,0
16	9,525	–	16,5	3,47
22	12,7	–	22,0	4,71
26	–	15,875	26,0	7,88

09NR/11Nx/16Nx/22Nx

11NR/16NR..A

11NR/16NR..A1

11NR/16NR..A2

26ER/26NR..

Pitch mm	Pitch TPI	Dimensions in mm PDY	PDX	RE	Insert Part No. Right	Grades Coated CP200	CP300	CP500	TTP2050	Uncoated H15			Insert Part No. Left	Grades Coated CP200	CP300	CP500	TTP2050	Uncoated H15		
0,5-1,5	48,0-16,0	0,7	0,8	0,08	09NRA60			■												
0,5-1,5	48,0-16,0	0,7	0,8	0,08	11NRA60	■		■		■			11NLA60			■				
0,5-1,5	48,0-16,0	0,7	0,8	0,08	16NRA60			■		■			16NLA60			■				
0,5-3,0	48,0-8,0	1,1	1,5	0,08	16NRAG60	■		■		■			16NLAG60			■				
1,75-3,0	14,0-8,0	1,1	1,5	0,12	16NRG60	■		■		■			16NLG60			■				
3,5-5,0	7,0-5,0	1,8	2,5	0,25	22NRN60	■	■	■		■			22NLN60			■				
0,5-1,5	48,0-16,0	0,7	0,8	0,08	11NRA60-A			■	■											
0,5-3,0	48,0-8,0	1,1	1,5	0,08	16NRAG60-A			■	■											
1,75-3,0	14,0-8,0	1,2	1,5	0,12	16NRG60-A			■	■											
0,5-1,5	48,0-16,0	0,7	0,8	0,08	11NRA60-A1			■												
0,5-3,0	48,0-8,0	1,1	1,5	0,08	16NRAG60-A1			■												
1,75-3,0	14,0-8,0	1,2	1,5	0,12	16NRG60-A1			■												
0,5-1,5	48,0-16,0	0,7	0,8	0,08	11NRA60-A2			■												
0,5-3,0	48,0-8,0	1,1	1,5	0,08	16NRAG60-A2			■												
1,75-3,0	14,0-8,0	1,2	1,5	0,12	16NRG60-A2			■												
5,5-10,0	4,5-2,5	–	5,0	0,4	26NRK60		■	■					26ERK60		■	■				

■ Stock standard

Subject to change refer to current price- and stock-list

ISO Metric – External Threading

Snap-Tap®

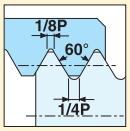

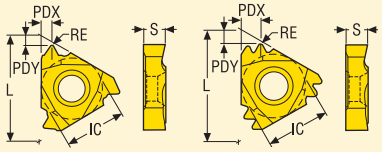

ISO965/1 - 1980
3h/4h

Size	Dimensions in mm IC	L	S
16	9,525	16,5	3,47
22	12,7	22,0	4,71
27	15,875	27,0	6,15

16Ex/22Ex/27ER

16ER..A

16ER..A1

16ER..A2

Pitch mm	Pitch TPI	Dimensions in mm PDY	PDX	RE	Insert Part No. Right	Grades Coated CP200	CP300	CP500	TTP2050	Uncoated H15			Insert Part No. Left	Grades Coated CP200	CP300	CP500	TTP2050	Uncoated H15		
0,50	–	0,8	0,8	0,06	16ER0.5ISO			■		■			16EL0.5ISO			■				
0,75	–	0,8	0,8	0,11	16ER0.75ISO			■		■			16EL0.75ISO			■				
0,80	–	0,8	0,6	0,11	16ER0.8ISO			■					16EL0.8ISO			■				
1,00	–	0,8	0,8	0,14	16ER1.0ISO	■		■		■			16EL1.0ISO			■				
1,25	–	0,8	0,8	0,17	16ER1.25ISO	■		■		■			16EL1.25ISO			■				
1,50	–	0,8	0,8	0,22	16ER1.5ISO	■		■		■			16EL1.5ISO		■	■				
1,75	–	1,2	1,5	0,25	16ER1.75ISO	■		■		■			16EL1.75ISO			■				
2,00	–	1,2	1,5	0,29	16ER2.0ISO	■		■		■			16EL2.0ISO			■				
2,50	–	1,2	1,5	0,34	16ER2.5ISO	■		■		■			16EL2.5ISO			■				
3,00	–	1,2	1,5	0,42	16ER3.0ISO	■		■		■			16EL3.0ISO			■				
3,50	–	1,8	2,5	0,47	22ER3.5ISO	■	■	■		■			22EL3.5ISO			■				
4,00	–	1,8	2,5	0,53	22ER4.0ISO	■	■	■		■			22EL4.0ISO			■				
4,50	–	1,8	2,5	0,59	22ER4.5ISO			■		■			22EL4.5ISO			■				
5,00	–	1,8	2,5	0,66	22ER5.0ISO	■		■		■			22EL5.0ISO			■				
5,50	–	2,2	3,2	0,72	27ER5.5ISO			■												
6,00	–	2,2	3,2	0,79	27ER6.0ISO		■	■												
1,00	–	0,8	0,8	0,14	16ER1.0ISO-A			■	■											
1,25	–	0,8	0,8	0,17	16ER1.25ISO-A			■	■											
1,50	–	0,8	0,8	0,22	16ER1.5ISO-A			■	■											
1,75	–	1,2	1,5	0,25	16ER1.75ISO-A			■	■											
2,00	–	1,2	1,5	0,29	16ER2.0ISO-A			■	■											
2,50	–	1,2	1,5	0,34	16ER2.5ISO-A			■	■											
3,00	–	1,2	1,5	0,42	16ER3.0ISO-A			■	■											
1,00	–	0,8	0,8	0,14	16ER1.0ISO-A1			■												
1,25	–	0,8	0,8	0,17	16ER1.25ISO-A1			■												
1,50	–	0,8	0,8	0,22	16ER1.5ISO-A1			■												
1,75	–	1,2	1,5	0,25	16ER1.75ISO-A1			■												
2,00	–	1,2	1,5	0,29	16ER2.0ISO-A1			■												
2,50	–	1,2	1,5	0,34	16ER2.5ISO-A1			■												
3,00	–	1,2	1,5	0,42	16ER3.0ISO-A1			■												
1,00	–	0,8	0,8	0,14	16ER1.0ISO-A2			■												
1,25	–	0,8	0,8	0,17	16ER1.25ISO-A2			■												
1,50	–	0,8	0,8	0,22	16ER1.5ISO-A2			■												
1,75	–	1,2	1,5	0,25	16ER1.75ISO-A2			■												
2,00	–	1,2	1,5	0,29	16ER2.0ISO-A2			■												
2,50	–	1,2	1,5	0,34	16ER2.5ISO-A2			■												
3,00	–	1,2	1,5	0,42	16ER3.0ISO-A2			■												

■ Stock standard
Subject to change refer to current price- and stock-list

ISO Metric – External Threading

Snap-Tap®

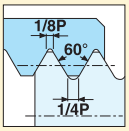

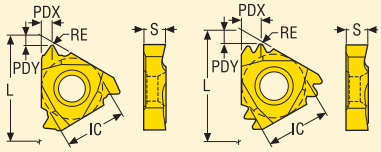

ISO965/1 - 1980
3h/4h

Size	Dimensions in mm IC	L	S
16	9,525	16,5	3,47
22	12,7	22,0	4,71
27	15,875	27,0	6,15

16ER..TT

16ER/22ER/27ER..M

Pitch mm	Pitch TPI	Dimensions in mm PDY	PDX	RE	Insert Part No. Right	Grades Coated CP200	CP300	CP500	TTP2050	Uncoated H15			Insert Part No. Left	Grades Coated CP200	CP300	CP500	TTP2050	Uncoated H15		
1,00	–	1,3	1,3	0,14	16ER1.0ISO-TT			■												
1,50	–	1,3	1,8	0,22	16ER1.5ISO-TT			■												
2,00	–	1,6	2,4	0,29	16ER2.0ISO-TT			■												
1,00	–	1,5	2,4	0,14	16ER1.0ISO3M			■												
1,50	–	1,5	2,2	0,22	16ER1.5ISO2M			■												
1,50	–	2,3	3,6	0,22	22ER1.5ISO3M			■												
2,00	–	2,0	2,9	0,29	22ER2.0ISO2M			■												
2,00	–	3,0	4,8	0,29	22ER2.0ISO3M			■												
3,00	–	2,8	4,3	0,42	27ER3.0ISO2M			■												

■ Stock standard
Subject to change refer to current price- and stock-list

ISO Metric – Internal Threading

Snap-Tap®

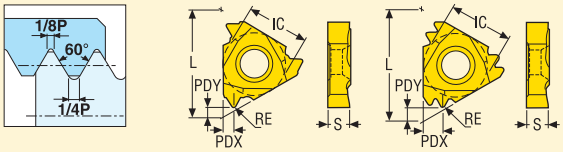

ISO965/1 - 1980
3h/4h

Size	Dimensions in mm IC	L	S
09	5,56	9,6	2,4
11	6,35	11,0	3,0
16	9,525	16,5	3,47
22	12,7	22,0	4,71
27	15,875	27,0	6,15

09NR/11Nx/16Nx/22Nx/27NR

Pitch mm	Pitch TPI	Dimensions in mm PDY	PDX	RE	Insert Part No. Right	Grades Coated CP200	CP300	CP500	TTP2050	Uncoated H15			Insert Part No. Left	Grades Coated CP200	CP300	CP500	TTP2050	Uncoated H15		
0,50	–	0,7	0,6	0,04	09NR0.5ISO			■												
0,80	–	0,7	0,6	0,07	09NR0.8ISO			■												
1,00	–	0,7	0,8	0,07	09NR1.0ISO			■												
1,25	–	0,7	0,8	0,11	09NR1.25ISO			■												
1,50	–	0,7	0,8	0,12	09NR1.5ISO			■												
1,75	–	0,7	0,8	0,12	09NR1.75ISO			■												
2,00	–	0,7	0,9	0,17	09NR2.0ISO			■												
0,50	–	0,8	0,8	0,03	11NR0.5ISO			■		■			11NL0.5ISO			■				
0,75	–	0,8	0,8	0,04	11NR0.75ISO			■		■			11NL0.75ISO			■				
1,00	–	0,8	0,8	0,08	11NR1.0ISO	■		■		■			11NL1.0ISO			■				
1,25	–	0,8	0,8	0,09	11NR1.25ISO			■		■			11NL1.25ISO			■				
1,50	–	0,8	0,8	0,12	11NR1.5ISO	■		■		■			11NL1.5ISO			■				
1,75	–	0,8	0,8	0,12	11NR1.75ISO			■		■										
2,00	–	0,8	0,9	0,17	11NR2.0ISO	■		■		■										
0,50	–	0,8	0,8	0,03	16NR0.5ISO			■		■			16NL0.5ISO			■				
0,75	–	0,8	0,8	0,04	16NR0.75ISO			■		■			16NL0.75ISO			■				
1,00	–	0,8	0,8	0,08	16NR1.0ISO	■		■		■			16NL1.0ISO	■		■				
1,25	–	0,8	0,8	0,09	16NR1.25ISO	■		■		■			16NL1.25ISO			■				
1,50	–	0,8	0,8	0,12	16NR1.5ISO	■		■		■			16NL1.5ISO	■		■				
1,75	–	1,2	1,5	0,12	16NR1.75ISO			■		■			16NL1.75ISO			■				
2,00	–	1,2	1,5	0,17	16NR2.0ISO	■		■		■			16NL2.0ISO			■				
2,50	–	1,2	1,5	0,18	16NR2.5ISO	■		■		■			16NL2.5ISO			■				
3,00	–	1,2	1,5	0,21	16NR3.0ISO	■		■		■			16NL3.0ISO			■				
3,50	–	1,9	2,3	0,25	22NR3.5ISO	■		■		■			22NL3.5ISO			■				
4,00	–	2,0	2,5	0,28	22NR4.0ISO	■	■	■		■			22NL4.0ISO			■				
4,50	–	2,1	2,5	0,32	22NR4.5ISO			■		■			22NL4.5ISO			■				
5,00	–	1,8	2,5	0,35	22NR5.0ISO	■		■		■			22NL5.0ISO			■				
5,50	–	2,2	3,2	0,38	27NR5.5ISO			■												
6,00	–	2,2	3,2	0,42	27NR6.0ISO		■	■												

■ Stock standard
Subject to change refer to current price- and stock-list

ISO Metric – Internal Threading

Snap-Tap®

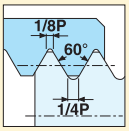

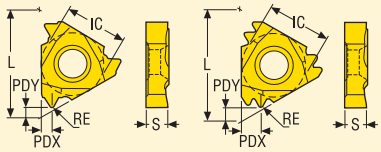

ISO965/1 - 1980
3h/4h

Size	Dimensions in mm IC	L	S
11	6,35	11,0	3,0
16	9,525	16,5	3,47
22	12,7	22,0	4,71
27	15,875	27,0	6,15

11NR/16NR..A

11NR/16NR..A1

11NR/16NR..A2

16NR..TT

16NR/22NR..M

Pitch mm	Pitch TPI	Dimensions in mm PDY	PDX	RE	Insert Part No. Right	Grades Coated CP200	CP300	CP500	TTP2050	Uncoated H15			Insert Part No. Left	Grades Coated CP200	CP300	CP500	TTP2050	Uncoated H15		
1,00	–	0,8	0,8	0,08	**11NR1.0ISO-A**			■	■											
1,50	–	0,8	0,8	0,12	**11NR1.5ISO-A**			■	■											
2,00	–	0,8	0,9	0,17	**11NR2.0ISO-A**			■	■											
1,00	–	0,8	0,8	0,09	**16NR1.0ISO-A**			■	■											
1,50	–	0,8	0,8	0,12	**16NR1.5ISO-A**			■	■											
2,00	–	1,2	1,5	0,16	**16NR2.0ISO-A**			■	■											
2,50	–	1,2	1,5	0,18	**16NR2.5ISO-A**			■	■											
3,00	–	1,2	1,5	0,21	**16NR3.0ISO-A**			■	■											
1,00	–	0,8	0,8	0,08	**11NR1.0ISO-A1**			■												
1,50	–	0,8	0,8	0,12	**11NR1.5ISO-A1**			■												
2,00	–	0,8	0,9	0,17	**11NR2.0ISO-A1**			■												
1,00	–	0,8	0,8	0,09	**16NR1.0ISO-A1**			■												
1,50	–	0,8	0,8	0,12	**16NR1.5ISO-A1**			■												
2,00	–	1,2	1,5	0,16	**16NR2.0ISO-A1**			■												
2,50	–	1,2	1,5	0,18	**16NR2.5ISO-A1**			■												
3,00	–	1,2	1,5	0,21	**16NR3.0ISO-A1**			■												
1,00	–	0,8	0,8	0,08	**11NR1.0ISO-A2**			■												
1,50	–	0,8	0,8	0,12	**11NR1.5ISO-A2**			■												
2,00	–	0,8	0,9	0,17	**11NR2.0ISO-A2**			■												
1,00	–	0,8	0,8	0,09	**16NR1.0ISO-A2**			■												
1,50	–	0,8	0,8	0,12	**16NR1.5ISO-A2**			■												
2,00	–	1,2	1,5	0,16	**16NR2.0ISO-A2**			■												
2,50	–	1,2	1,5	0,18	**16NR2.5ISO-A2**			■												
3,00	–	1,2	1,5	0,21	**16NR3.0ISO-A2**			■												
1,00	–	1,3	1,2	0,09	**16NR1.0ISO-TT**			■												
1,50	–	1,3	1,8	0,12	**16NR1.5ISO-TT**			■												
2,00	–	1,6	2,4	0,18	**16NR2.0ISO-TT**			■												
1,00	–	1,5	2,4	0,08	**16NR1.0ISO3M**			■												
1,50	–	1,4	2,1	0,12	**16NR1.5ISO2M**			■												
1,50	–	2,3	3,6	0,12	**22NR1.5ISO3M**			■												
2,00	–	2,0	2,9	0,17	**22NR2.0ISO2M**			■												
2,00	–	3,0	4,8	0,17	**22NR2.0ISO3M**			■												
3,00	–	2,8	4,3	0,21	**27NR3.0ISO2M**			■												

■ **Stock standard**
Subject to change refer to current price- and stock-list

UN – External Threading

Snap-Tap®

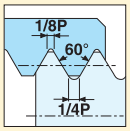

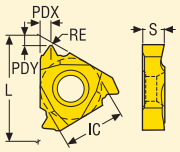

ANSI B1.1 - 1983
3A

Size	Dimensions in mm IC	L	S
16	9,525	16,5	3,47
22	12,7	22,0	4,71
27	15,875	27,0	6,15

16Ex/22Ex/27ER

16ER..A

16ER..A1

16ER..A2

Pitch mm	Pitch TPI	Dimensions in mm PDY	PDX	RE	Insert Part No. Right	Grades Coated CP200	CP300	CP500	TTP2050	Uncoated H15			Insert Part No. Left	Grades Coated CP200	CP300	CP500	TTP2050	Uncoated H15		
–	40	1,2	0,5	0,08	16ER40UN			■												
–	32	0,8	0,8	0,09	16ER32UN			■		■			16EL32UN			■				
–	28	0,8	0,8	0,11	16ER28UN		■	■		■			16EL28UN			■				
–	24	0,8	0,8	0,13	16ER24UN		■	■		■			16EL24UN			■				
–	20	0,8	0,8	0,16	16ER20UN			■		■			16EL20UN			■				
–	18	1,2	0,8	0,18	16ER18UN			■		■			16EL18UN			■				
–	16	1,2	0,8	0,22	16ER16UN	■		■		■			16EL16UN			■				
–	14	1,2	1,5	0,22	16ER14UN	■		■		■			16EL14UN			■				
–	13	1,2	1,5	0,24	16ER13UN			■												
–	12	1,2	1,5	0,26	16ER12UN	■		■		■			16EL12UN			■				
–	11	1,2	1,5	0,28	16ER11UN			■		■			16EL11UN			■				
–	10	1,2	1,5	0,34	16ER10UN			■		■			16EL10UN			■				
–	9	1,2	1,5	0,34	16ER9UN			■		■			16EL9UN			■				
–	8	1,2	1,5	0,38	16ER8UN	■		■		■			16EL8UN			■				
–	7	1,8	2,5	0,47	22ER7UN			■		■			22EL7UN			■				
–	6	2,0	2,5	0,52	22ER6UN			■		■			22EL6UN			■				
–	5	1,8	2,5	0,6	22ER5UN			■					22EL5UN			■				
–	4	2,2	3,2	0,79	27ER4UN			■												
–	20	0,8	0,8	0,16	16ER20UN-A			■	■											
–	18	0,8	0,8	0,18	16ER18UN-A			■	■											
–	16	0,8	0,8	0,22	16ER16UN-A			■	■											
–	14	1,2	1,5	0,22	16ER14UN-A			■	■											
–	12	1,2	1,5	0,29	16ER12UN-A			■	■											
–	8	1,2	1,5	0,43	16ER8UN-A			■	■											
–	20	0,8	0,8	0,16	16ER20UN-A1			■												
–	18	0,8	0,8	0,18	16ER18UN-A1			■												
–	16	0,8	0,8	0,22	16ER16UN-A1			■												
–	14	1,2	1,5	0,22	16ER14UN-A1			■												
–	12	1,2	1,5	0,29	16ER12UN-A1			■												
–	8	1,2	1,5	0,43	16ER8UN-A1			■												
–	20	0,8	0,8	0,16	16ER20UN-A2			■												
–	18	0,8	0,8	0,18	16ER18UN-A2			■												
–	16	0,8	0,8	0,22	16ER16UN-A2			■												
–	14	1,2	1,5	0,22	16ER14UN-A2			■												
–	12	1,2	1,5	0,29	16ER12UN-A2			■												
–	8	1,2	1,5	0,43	16ER8UN-A2			■												

■ Stock standard
Subject to change refer to current price- and stock-list

UN – External Threading

Snap-Tap®

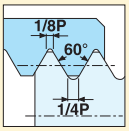

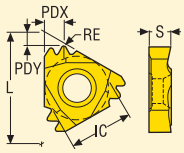

ANSI B1.1 - 1983
3A

Size	Dimensions in mm IC	L	S
16	9,525	16,5	3,47
22	12,7	22,0	4,71

16ER..TT

22ER..M

Pitch mm	Pitch TPI	Dimensions in mm PDY	PDX	RE	Insert Part No. Right	Grades Coated CP200	CP300	CP500	TTP2050	Uncoated H15			Insert Part No. Left	Grades Coated CP200	CP300	CP500	TTP2050	Uncoated H15		
–	20	1,2	1,6	0,16	16ER20UN-TT			■												
–	16	1,4	1,9	0,21	16ER16UN-TT			■												
–	12	1,7	2,6	0,29	16ER12UN-TT			■												
–	16	2,5	4,0	0,21	22ER16UN3M			■												
–	12	2,0	3,1	0,26	22ER12UN2M			■												

■ Stock standard
Subject to change refer to current price- and stock-list

UN – Internal Threading

Snap-Tap®

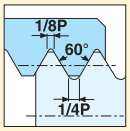

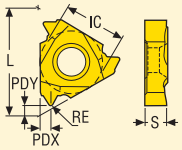

ANSI B1.1 - 1983
3B

Size	Dimensions in mm IC	L	S
09	5,56	9,6	2,4
11	6,35	11,0	3,0
16	9,525	16,5	3,47
22	12,7	22,0	4,71
27	15,875	27,0	6,15

09NR/11Nx/16Nx/22Nx/27NR

Pitch mm	Pitch TPI	Dimensions in mm PDY	PDX	RE	Insert Part No. Right	Grades Coated CP200	CP300	CP500	TTP2050	Uncoated H15			Insert Part No. Left	Grades Coated CP200	CP300	CP500	TTP2050	Uncoated H15		
–	20	0,7	0,8	0,09	09NR20UN			■												
–	18	0,7	0,8	0,1	09NR18UN			■												
–	13	0,7	0,9	0,15	09NR13UN			■												
–	32	0,8	0,8	0,04	11NR32UN			■		■										
–	28	0,8	0,8	0,05	11NR28UN			■		■										
–	24	0,8	0,8	0,07	11NR24UN			■		■			11NL24UN			■				
–	20	0,8	0,8	0,09	11NR20UN			■		■			11NL20UN			■				
–	18	0,8	0,8	0,1	11NR18UN			■		■			11NL18UN			■				
–	16	0,8	0,8	0,13	11NR16UN			■		■			11NL16UN			■				
–	14	0,8	0,9	0,14	11NR14UN			■		■			11NL14UN			■				
–	40	1,2	0,5	0,04	16NR40UN			■												
–	32	0,8	0,8	0,04	16NR32UN	■		■		■			16NL32UN			■				
–	28	0,8	0,8	0,05	16NR28UN	■		■					16NL28UN			■				
–	24	0,8	0,8	0,07	16NR24UN	■		■		■			16NL24UN			■				
–	20	0,8	0,8	0,09	16NR20UN	■		■		■			16NL20UN			■				
–	18	0,8	0,8	0,1	16NR18UN	■		■		■			16NL18UN			■				
–	16	0,8	0,8	0,13	16NR16UN	■		■		■			16NL16UN	■		■				
–	14	1,2	1,5	0,14	16NR14UN	■		■		■			16NL14UN	■		■				
–	13	1,2	1,5	0,15	16NR13UN			■												
–	12	1,2	1,5	0,15	16NR12UN	■		■		■			16NL12UN			■				
–	11	1,2	1,5	0,16	16NR11UN			■		■			16NL11UN			■				
–	10	1,2	1,5	0,18	16NR10UN	■		■		■			16NL10UN			■				
–	9	1,2	1,5	0,19	16NR9UN			■												
–	8	1,2	1,5	0,25	16NR8UN	■		■		■			16NL8UN			■				
–	7	2,0	2,4	0,25	22NR7UN			■					22NL7UN			■				
–	6	2,2	2,5	0,3	22NR6UN			■		■			22NL6UN			■				
–	5	1,8	2,5	0,36	22NR5UN			■		■										
–	4	2,2	3,2	0,45	27NR4UN			■												

■ Stock standard
Subject to change refer to current price- and stock-list

UN – Internal Threading

Snap-Tap®

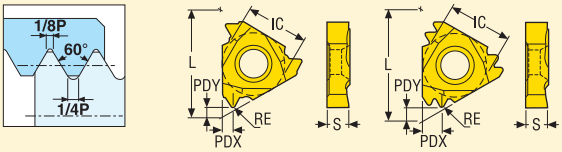

ANSI B1.1 - 1983
3B

Size	Dimensions in mm IC	L	S
16	9,525	16,5	3,47
22	12,7	22,0	4,71

16NR..A

16NR..A1

16NR..A2

16NR..TT

16NR/22NR..M

Pitch mm	Pitch TPI	Dimensions in mm PDY	PDX	RE	Insert Part No. Right	Grades Coated CP200	CP300	CP500	TTP2050	Uncoated H15			Insert Part No. Left	Grades Coated CP200	CP300	CP500	TTP2050	Uncoated H15		
–	20	0,8	0,8	0,09	16NR20UN-A			■	■											
–	18	0,8	0,8	0,1	16NR18UN-A			■	■											
–	16	0,8	0,8	0,12	16NR16UN-A			■	■											
–	14	1,2	1,3	0,14	16NR14UN-A			■	■											
–	12	1,2	1,5	0,15	16NR12UN-A			■	■											
–	8	1,2	1,5	0,25	16NR8UN-A			■	■											
–	20	0,8	0,8	0,09	16NR20UN-A1			■												
–	18	0,8	0,8	0,1	16NR18UN-A1			■												
–	16	0,8	0,8	0,12	16NR16UN-A1			■												
–	14	1,2	1,3	0,14	16NR14UN-A1			■												
–	12	1,2	1,5	0,15	16NR12UN-A1			■												
–	8	1,2	1,5	0,25	16NR8UN-A1			■												
–	20	0,8	0,8	0,09	16NR20UN-A2			■												
–	18	0,8	0,8	0,1	16NR18UN-A2			■												
–	16	0,8	0,8	0,12	16NR16UN-A2			■												
–	14	1,2	1,3	0,14	16NR14UN-A2			■												
–	12	1,5	1,5	0,15	16NR12UN-A2			■												
–	8	1,2	1,5	0,25	16NR8UN-A2			■												
–	16	1,4	1,9	0,13	16NR16UN-TT			■												
–	12	1,65	2,45	0,16	16NR12UN-TT			■												
–	16	1,5	2,3	0,13	16NR16UN2M			■												
–	16	2,4	3,8	0,13	22NR16UN3M			■												
–	12	2,0	3,0	0,15	22NR12UN2M			■												
–	12	3,0	5,0	0,15	22NR12UN3M			■												

■ Stock standard
Subject to change refer to current price- and stock-list

UNJ – External Threading

Snap-Tap®

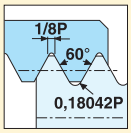

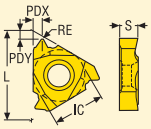

BS4084 - 1996
MIL-SPECS - 8879A
3A

Size	Dimensions in mm IC	L	S
16	9,525	16,5	3,47

16Ex

Pitch mm	Pitch TPI	Dimensions in mm PDY	PDX	RE	Insert Part No. Right	Grades Coated CP200	CP300	CP500	TTP2050	Uncoated H15			Insert Part No. Left	Grades Coated CP200	CP300	CP500	TTP2050	Uncoated H15		
–	32	0,8	0,8	0,11	16ER32UNJ	■		■												
–	28	0,8	0,8	0,14	16ER28UNJ	■		■												
–	24	0,8	0,8	0,16	16ER24UNJ	■		■												
–	20	0,8	0,8	0,21	16ER20UNJ	■		■		■										
–	18	1,2	0,8	0,24	16ER18UNJ	■		■												
–	16	1,2	0,8	0,27	16ER16UNJ	■		■		■										
–	14	1,2	1,5	0,3	16ER14UNJ	■		■												
–	12	1,2	1,5	0,34	16ER12UNJ	■		■		■										
–	10	1,2	1,5	0,34	16ER10UNJ	■		■												
–	8	1,2	1,5	0,45	16ER8UNJ	■		■												

UNJ – Internal Threading

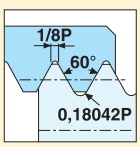

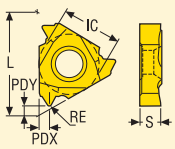

BS4084 - 1996
MIL-SPECS - 8879A
3B

Size	Dimensions in mm IC	L	S
16	9,525	16,5	3,47

16Ex

Pitch mm	Pitch TPI	Dimensions in mm PDY	PDX	RE	Insert Part No. Right	Grades Coated CP200	CP300	CP500	TTP2050	Uncoated H15			Insert Part No. Left	Grades Coated CP200	CP300	CP500	TTP2050	Uncoated H15		
–	–	1,2	0,4	0,03	16NR32UNJ	■														
–	–	1,2	0,4	0,04	16NR28UNJ	■														
–	–	1,2	0,5	0,06	16NR24UNJ	■														
–	–	1,2	0,5	0,08	16NR20UNJ	■														
–	–	1,2	0,6	0,09	16NR18UNJ	■														
–	–	1,2	0,6	0,1	16NR16UNJ	■														
–	–	1,2	0,7	0,11	16NR14UNJ	■														
–	–	1,2	0,8	0,12	16NR12UNJ	■														
–	–	1,2	1,0	0,17	16NR10UNJ	■														
–	–	1,2	1,2	0,22	16NR8UNJ	■														

■ Stock standard
Subject to change refer to current price- and stock-list

MJ – External Threading

Snap-Tap®

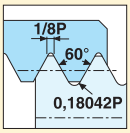

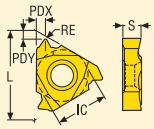

ISO5855 - 1983
4h/6h

Size	Dimensions in mm IC	L	S
16	9,525	16,5	3,47

16Ex

Pitch mm	Pitch TPI	Dimensions in mm PDY	PDX	RE	Insert Part No. Right	Grades Coated CP200	CP300	CP500	TTP2050	Uncoated H15			Insert Part No. Left	Grades Coated CP200	CP300	CP500	TTP2050	Uncoated H15		
1,0	–	0,8	0,8	0,16	16ER1.0MJ	■		■		■			16EL1.0MJ	■						
1,25	–	0,8	0,8	0,21	16ER1.25MJ	■														
1,5	–	0,8	0,8	0,25	16ER1.5MJ	■		■		■			16EL1.5MJ	■						
2,0	–	1,2	1,5	0,32	16ER2.0MJ	■														

MJ – Internal Threading

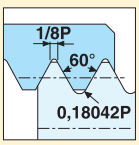

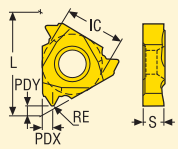

ISO5855 - 1983
4H/5H

Size	Dimensions in mm IC	L	S
16	9,525	16,5	3,47

16Ex

Pitch mm	Pitch TPI	Dimensions in mm PDY	PDX	RE	Insert Part No. Right	Grades Coated CP200	CP300	CP500	TTP2050	Uncoated H15			Insert Part No. Left	Grades Coated CP200	CP300	CP500	TTP2050	Uncoated H15		
–	–	1,2	0,4	0,06	16NR1.0MJ	■														
–	–	1,2	0,5	0,08	16NR1.25MJ	■														
–	–	1,2	0,6	0,09	16NR1.5MJ	■														
–	–	1,2	0,8	0,12	16NR2.0MJ	■														

■ Stock standard
Subject to change refer to current price- and stock-list

Whitworth, BSW – External Threading

Snap-Tap®

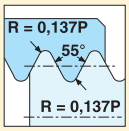

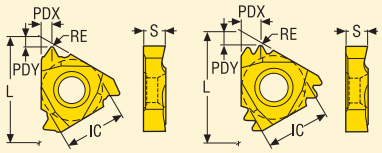

BS84 -1956
ISO228 - 1982
BS2779 - 1973

Size	Dimensions in mm IC	L	S
16	9,525	16,5	3,47
22	12,7	22,0	4,71

16Ex/22Ex

16ER..A

16ER..A1

16ER..A2

16ER..TT

22ER..M

Pitch mm	Pitch TPI	Dimensions in mm PDY	PDX	RE	Insert Part No. Right	Grades Coated CP200	CP300	CP500	TTP2050	Uncoated H15			Insert Part No. Left	Grades Coated CP200	CP300	CP500	TTP2050	Uncoated H15		
–	28	0,8	0,8	0,09	16ER28W			■		■			16EL28W			■				
–	20	0,8	0,8	0,14	16ER20W			■		■			16EL20W			■				
–	19	0,8	0,8	0,15	16ER19W	■		■		■			16EL19W			■				
–	18	0,8	0,8	0,16	16ER18W			■												
–	16	0,8	0,8	0,2	16ER16W			■		■			16EL16W			■				
–	14	1,2	1,5	0,24	16ER14W	■		■		■			16EL14W			■				
–	12	1,2	1,5	0,24	16ER12W			■		■			16EL12W			■				
–	11	1,2	1,5	0,3	16ER11W	■		■		■			16EL11W			■				
–	10	1,2	1,5	0,27	16ER10W			■		■			16EL10W			■				
–	9	1,2	1,5	0,31	16ER9W			■					16EL9W			■				
–	8	1,2	1,5	0,42	16ER8W			■		■			16EL8W			■				
–	7	1,8	2,5	0,43	22ER7W			■		■			22EL7W			■				
–	6	1,8	2,5	0,5	22ER6W			■		■			22EL6W			■				
–	5	1,7	2,5	0,63	22ER5W			■		■			22EL5W			■				
–	19	0,8	0,8	0,16	16ER19W-A			■	■											
–	14	1,2	1,5	0,24	16ER14W-A			■	■											
–	11	1,2	1,5	0,3	16ER11W-A			■	■											
–	19	0,8	0,8	0,16	16ER19W-A1			■												
–	14	1,2	1,5	0,24	16ER14W-A1			■												
–	11	1,2	1,5	0,3	16ER11W-A1			■												
–	19	0,8	0,8	0,16	16ER19W-A2			■												
–	14	1,2	1,5	0,24	16ER14W-A2			■												
–	11	1,2	1,5	0,3	16ER11W-A2			■												
–	14	1,5	2,2	0,24	16ER14W-TT			■												
–	11	1,8	2,8	0,3	16ER11W-TT			■												
–	11	2,3	3,5	0,3	22ER11W2M			■												

■ Stock standard
Subject to change refer to current price- and stock-list

Whitworth, BSW – Internal Threading

Snap-Tap®

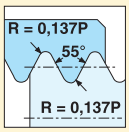

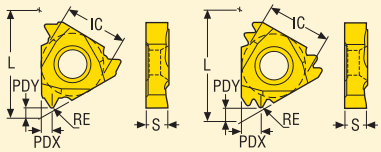

BS84 -1956
ISO228 - 1982
BS2779 - 1973

Size	Dimensions in mm IC	L	S
09	5,56	9,6	2,4
11	6,35	11,0	3,0
16	9,525	16,5	3,47
22	12,7	22,0	4,71

09NR/11Nx/16Nx/22Nx

11NR/16NR..A

11NR/16NR..A1

11NR/16NR..A2

16NR..TT

22NR..M

Pitch mm	Pitch TPI	Dimensions in mm PDY	PDX	RE	Insert Part No. Right	Grades Coated CP200	CP300	CP500	TTP2050	Uncoated H15			Insert Part No. Left	Grades Coated CP200	CP300	CP500	TTP2050	Uncoated H15		
–	19	0,7	0,8	0,15	09NR19W			■												
–	14	0,7	0,9	0,24	09NR14W			■												
–	19	0,8	0,8	0,15	11NR19W	■		■		■			11NL19W			■				
–	14	0,7	0,9	0,24	11NR14W	■		■		■			11NL14W			■				
–	28	0,8	0,8	0,09	16NR28W			■					16NL28W			■				
–	20	0,8	0,8	0,14	16NR20W			■		■			16NL20W			■				
–	19	0,8	0,8	0,15	16NR19W	■		■		■			16NL19W			■				
–	16	0,8	0,8	0,2	16NR16W			■		■			16NL16W			■				
–	14	1,2	1,5	0,24	16NR14W	■		■		■			16NL14W			■				
–	12	1,2	1,5	0,24	16NR12W			■		■			16NL12W			■				
–	11	1,2	1,5	0,3	16NR11W	■		■		■			16NL11W			■				
–	10	1,2	1,5	0,27	16NR10W	■		■		■			16NL10W			■				
–	9	1,2	1,5	0,31	16NR9W			■		■			16NL9W			■				
–	8	1,2	1,5	0,42	16NR8W			■		■			16NL8W			■				
–	7	1,8	2,5	0,43	22NR7W			■					22NL7W			■				
–	6	1,8	2,5	0,5	22NR6W			■		■			22NL6W			■				
–	5	1,7	2,5	0,63	22NR5W			■		■			22NL5W			■				
–	19	0,8	0,8	0,15	11NR19W-A			■	■											
–	14	0,7	0,9	0,24	11NR14W-A			■	■											
–	14	1,2	1,1	0,23	16NR14W-A			■	■											
–	11	1,2	1,5	0,3	16NR11W-A			■	■											
–	19	0,8	0,8	0,15	11NR19W-A1			■												
–	14	0,7	0,9	0,24	11NR14W-A1			■												
–	14	1,2	1,1	0,23	16NR14W-A1			■												
–	11	1,2	1,5	0,3	16NR11W-A1			■												
–	19	0,8	0,8	0,15	11NR19W-A2			■												
–	14	0,7	0,9	0,24	11NR14W-A2			■												
–	14	1,2	1,1	0,23	16NR14W-A2			■												
–	11	1,2	1,5	0,3	16NR11W-A2			■												
–	14	1,5	2,2	0,23	16NR14W-TT			■												
–	11	1,8	2,8	0,31	16NR11W-TT			■												
–	11	2,3	3,5	0,3	22NR11W2M			■												

■ Stock standard
Subject to change refer to current price- and stock-list

BSPT – External Threading

Snap-Tap®

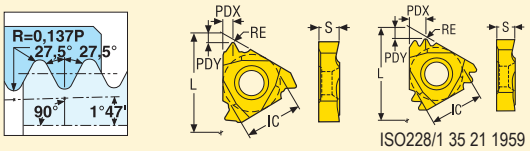

ISO228/1 35 21 1959
ISO7/1

Size	Dimensions in mm IC	L	S
16	9,525	16,5	3,47

16Ex..

16ER..TT

Pitch mm	Pitch TPI	Dimensions in mm PDY	PDX	RE	Insert Part No. Right	Grades Coated CP200	CP300	CP500	TTP2050	Uncoated H15			Insert Part No. Left	Grades Coated CP200	CP300	CP500	TTP2050	Uncoated H15		
–	28	0,7	0,8	0,08	16ER28BSPT			■												
–	19	0,8	0,8	0,15	16ER19BSPT			■												
–	14	1,2	1,5	0,24	16ER14BSPT			■					16EL14BSPT			■				
–	11	1,2	1,5	0,3	16ER11BSPT			■					16EL11BSPT			■				
–	14	1,5	2,2	0,24	16ER14BSPT-TT			■												
–	11	1,8	2,8	0,3	16ER11BSPT-TT			■												

BSPT – Internal Threading

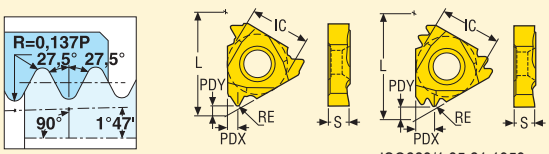

ISO228/1 35 21 1959
ISO7/1

Size	Dimensions in mm IC	L	S
09	5,56	9,6	2,4
16	9,525	16,5	3,47

09NR/16Nx..

16NR..TT

Pitch mm	Pitch TPI	Dimensions in mm PDY	PDX	RE	Insert Part No. Right	Grades Coated CP200	CP300	CP500	TTP2050	Uncoated H15			Insert Part No. Left	Grades Coated CP200	CP300	CP500	TTP2050	Uncoated H15		
–	19	0,8	0,8	0,15	09NR19BSPT			■												
–	14	1,2	1,5	0,24	16NR14BSPT			■					16NL14BSPT			■				
–	11	1,2	1,5	0,3	16NR11BSPT			■					16NL11BSPT			■				
–	14	1,5	2,2	0,24	16NR14BSPT-TT			■												
–	11	1,8	2,8	0,3	16NR11BSPT-TT			■												

■ Stock standard
Subject to change refer to current price- and stock-list

NPT– External Threading

Snap-Tap®

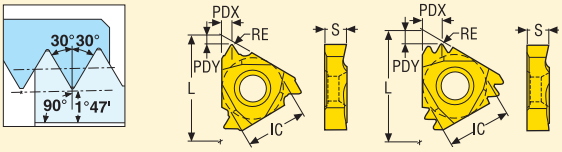

ANSI B1.20.1 - 1983

Size	Dimensions in mm IC	L	S
16	9,525	16,5	3,47
22	12,7	22,0	4,71
27	15,875	27,0	6,15

16Ex..

16ER..A1

16ER..A2

22ER/27ER..M

Pitch mm	Pitch TPI	Dimensions in mm PDY	PDX	RE	Insert Part No. Right	Grades Coated CP200	CP300	CP500	TTP2050	Uncoated H15			Insert Part No. Left	Grades Coated CP200	CP300	CP500	TTP2050	Uncoated H15		
–	27	0,7	0,8	0,04	16ER27NPT			■												
–	18	0,7	0,8	0,06	16ER18NPT			■		■			16EL18NPT			■				
–	14	1,1	1,5	0,07	16ER14NPT			■		■			16EL14NPT			■				
–	11,5	1,1	1,5	0,07	16ER11.5NPT			■		■			16EL11.5NPT			■				
–	8	1,1	1,6	0,07	16ER8NPT			■		■			16EL8NPT			■				
–	11,5	1,1	1,5	0,09	16ER11.5NPT-A1			■												
–	11,5	1,1	1,5	0,09	16ER11.5NPT-A2			■												
–	11,5	2,1	3,3	0,07	22ER11.5NPT2M			■												
–	8	3,0	4,8	0,07	27ER8NPT2M			■												

■ Stock standard
Subject to change refer to current price- and stock-list

NPT – Internal Threading

Snap-Tap®

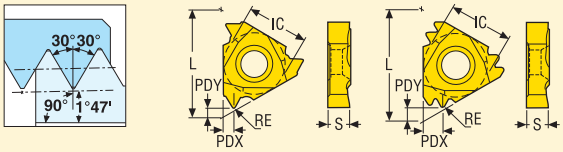

ANSI B1.20.1 - 1983

Size	Dimensions in mm IC	L	S
09	5,56	9,6	2,4
11	6,35	11,0	3,0
16	9,525	16,5	3,47
22	12,7	22,0	4,71

09NR/11NR/16Nx

16NR..A1

16NR..A2

22NR..M

Pitch mm	Pitch TPI	Dimensions in mm PDY	PDX	RE	Insert Part No. Right	Grades Coated CP200	CP300	CP500	TTP2050	Uncoated H15			Insert Part No. Left	Grades Coated CP200	CP300	CP500	TTP2050	Uncoated H15		
–	27	0,7	0,8	0,04	09NR27NPT			■												
–	18	0,7	0,8	0,06	09NR18NPT			■												
–	18	0,7	0,8	0,06	11NR18NPT			■												
–	14	0,7	1,0	0,07	11NR14NPT			■												
–	14	1,1	1,5	0,08	16NR14NPT			■		■			16NL14NPT			■				
–	11,5	1,1	1,5	0,09	16NR11.5NPT			■		■			16NL11.5NPT			■				
–	8	1,1	1,6	0,1	16NR8NPT			■		■			16NL8NPT			■				
–	11,5	1,1	1,5	0,1	16NR11.5NPT-A1			■												
–	14	1,1	1,5	0,08	16NR14NPT-A2			■												
–	11,5	1,1	1,5	0,1	16NR11.5NPT-A2			■												
–	8	1,1	1,6	0,12	16NR8NPT-A2			■												
–	11,5	2,1	3,3	0,05	22NR11.5NPT2M			■												

■ Stock standard

Subject to change refer to current price- and stock-list

NPTF– External Threading

Snap-Tap®

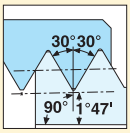

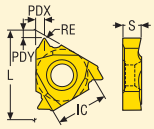

ANSI B1.4 - 1976
ANSI B1.20.3 - 1976

Size	Dimensions in mm IC	L	S
16	9,525	16,5	3,47

16ER..

Pitch mm	Pitch TPI	Dimensions in mm PDY	PDX	RE	Insert Part No. Right	Grades Coated CP200	CP300	CP500	TTP2050	Uncoated H15			Insert Part No. Left	Grades Coated CP200	CP300	CP500	TTP2050	Uncoated H15		
–	27	0,7	0,8	0,04	16ER27NPTF			■												
–	18	0,7	0,8	0,04	16ER18NPTF			■												
–	14	1,1	1,5	0,05	16ER14NPTF			■												
–	11,5	1,1	1,5	0,06	16ER11.5NPTF			■												

NPTF – Internal Threading

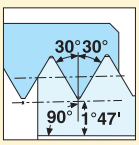

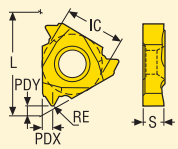

ANSI B1.4 - 1976
ANSI B1.20.3 - 1976

Size	Dimensions in mm IC	L	S
11	6,35	11,0	3,0
16	9,525	16,5	3,47

11NR/16Nx

Pitch mm	Pitch TPI	Dimensions in mm PDY	PDX	RE	Insert Part No. Right	Grades Coated CP200	CP300	CP500	TTP2050	Uncoated H15			Insert Part No. Left	Grades Coated CP200	CP300	CP500	TTP2050	Uncoated H15		
–	18	0,7	0,8	0,04	11NR18NPTF			■												
–	14	1,1	1,5	0,05	16NR14NPTF			■												
–	11,5	1,1	1,5	0,06	16NR11.5NPTF			■					16NL11.5NPTF			■				

■ Stock standard
Subject to change refer to current price- and stock-list

Round-DIN405 – External Threading

Snap-Tap®

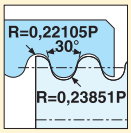

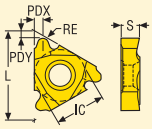

DIN405 - 1981
7h/6h

Size	Dimensions in mm IC	L	S
16	9,525	16,5	3,47
22	12,7	22,0	4,71
27	15,875	27,0	6,15

16ER/22Ex/27ER

Pitch mm	Pitch TPI	Dimensions in mm PDY	PDX	RE	Insert Part No. Right	Grades Coated CP200	CP300	CP500	TTP2050	Uncoated H15			Insert Part No. Left	Grades Coated CP200	CP300	CP500	TTP2050	Uncoated H15		
–	10	1,3	1,5	0,58	16ER10RD			■												
–	8	1,3	1,5	0,73	16ER8RD			■												
–	6	1,3	1,8	0,97	16ER6RD			■												
–	6	2,0	2,5	0,97	22ER6RD			■					22EL6RD			■				
–	4	2,2	3,2	1,46	27ER4RD			■												

Round-DIN405 – Internal Threading

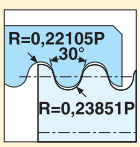

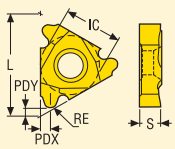

DIN405 - 1981
7h/6h

Size	Dimensions in mm IC	L	S
16	9,525	16,5	3,47
22	12,7	22,0	4,71
27	15,875	27,0	6,15

16NR/22Nx/27NR

Pitch mm	Pitch TPI	Dimensions in mm PDY	PDX	RE	Insert Part No. Right	Grades Coated CP200	CP300	CP500	TTP2050	Uncoated H15			Insert Part No. Left	Grades Coated CP200	CP300	CP500	TTP2050	Uncoated H15		
–	10	1,3	1,5	0,51	16NR10RD			■												
–	8	1,3	1,5	0,69	16NR8RD			■												
–	6	1,3	1,8	0,87	16NR6RD			■												
–	6	2,0	2,5	0,87	22NR6RD			■					22NL6RD			■				
–	4	2,2	3,2	1,31	27NR4RD			■												

■ Stock standard
Subject to change refer to current price- and stock-list

TR-DIN103 – External Threading

Snap-Tap®

Partial profile

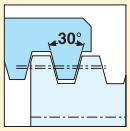

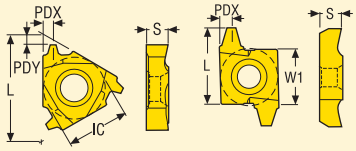

DIN103 - 1977
ISO2901/3 - 1977
7e

Size	Dimensions in mm IC	W1	L	S
16	9,525	–	16,5	3,47
22	12,7	–	22,0	4,71
27	15,875	–	27,0	6,15
20	–	12,7	20,0	6,3
26	–	15,875	26,0	7,88

16Ex/22Ex27ER

20ER/26ER

Pitch mm	Pitch TPI	Dimensions in mm PDY	PDX	RE	Insert Part No. Right	Grades Coated CP200	CP300	CP500	TTP2050	Uncoated H15			Insert Part No. Left	Grades Coated CP200	CP300	CP500	TTP2050	Uncoated H15		
1,5	–	0,9	0,8	–	16ER1.5TR			■					16EL1.5TR			■				
2,0	–	1,3	1,5	–	16ER2.0TR			■					16EL2.0TR			■				
3,0	–	1,3	1,6	–	16ER3.0TR			■					16EL3.0TR			■				
4,0	–	2,0	2,5	–	22ER4.0TR			■					22EL4.0TR			■				
5,0	–	2,0	2,3	–	22ER5.0TR		■	■					22EL5.0TR			■				
6,0	–	2,5	3,2	–	27ER6.0TR			■												
7,0	–	–	3,2	–	20ER7.0TR		■	■												
8,0	–	–	3,2	–	20ER8.0TR		■	■												
9,0	–	–	5,0	–	26ER9.0TR			■												
10,0	–	–	5,0	–	26ER10.0TR		■	■												
12,0	–	–	5,0	–	26ER12.0TR		■	■												
14,0	–	–	5,1	–	26ER14.0TR			■												

■ Stock standard
Subject to change refer to current price- and stock-list

TR-DIN103 – Internal Threading

Snap-Tap®

Partial profile

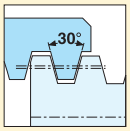

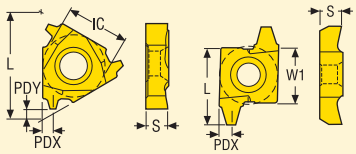

DIN103 - 1977
ISO2901/3 - 1977
7H

Size	Dimensions in mm IC	W1	L	S
16	9,525	–	16,5	3,47
22	12,7	–	22,0	4,71
27	15,875	–	27,0	6,15
20	–	12,7	20,0	6,3
26	–	15,875	26,0	7,88

16Nx/22Nx/27NR

20NR/26NR

Pitch mm	Pitch TPI	Dimensions in mm PDY	PDX	RE	Insert Part No. Right	Grades Coated CP200	CP300	CP500	TTP2050	Uncoated H15			Insert Part No. Left	Grades Coated CP200	CP300	CP500	TTP2050	Uncoated H15		
1,5	–	0,9	0,8	–	16NR1.5TR			■					16NL1.5TR			■				
2,0	–	1,3	1,5	–	16NR2.0TR			■					16NL2.0TR			■				
3,0	–	1,3	1,6	–	16NR3.0TR			■					16NL3.0TR			■				
4,0	–	2,0	2,5	–	22NR4.0TR			■					22NL4.0TR			■				
5,0	–	2,0	2,3	–	22NR5.0TR			■					22NL5.0TR			■				
6,0	–	2,5	3,2	–	27NR6.0TR			■												
7,0	–	–	3,2	–	20NR7.0TR		■	■												
8,0	–	–	3,2	–	20NR8.0TR		■	■												
9,0	–	–	5,0	–	26NR9.0TR			■												
10,0	–	–	5,0	–	26NR10.0TR		■	■												
12,0	–	–	5,0	–	26NR12.0TR		■	■												
14,0	–	–	5,1	–	26NR14.0TR			■												

■ Stock standard
Subject to change refer to current price- and stock-list

ACME – External Threading

Snap-Tap®

Partial profile

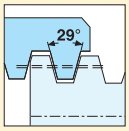

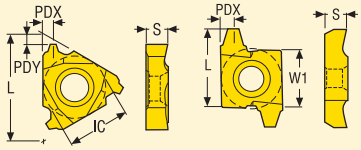

ANSI B1.5 - 1988
3G

Size	Dimensions in mm IC	W1	L	S
16	9,525	–	16,5	3,47
22	12,7	–	22,0	4,71
27	15,875	–	27,0	6,15
20	–	12,7	20,0	6,3
26	–	15,875	26,0	7,88

16Ex/22Ex/27Ex

20ER/26ER

Pitch mm	Pitch TPI	Dimensions in mm PDY	PDX	RE	Insert Part No. Right	Grades Coated CP200	CP300	CP500	TTP2050	Uncoated H15			Insert Part No. Left	Grades Coated CP200	CP300	CP500	TTP2050	Uncoated H15		
–	16	0,9	0,8	–	16ER16ACME			■												
–	14	1,3	1,5	–	16ER14ACME			■												
–	12	1,3	1,5	–	16ER12ACME			■												
–	10	1,4	1,5	–	16ER10ACME			■					16EL10ACME			■				
–	8	1,3	1,5	–	16ER8ACME			■					16EL8ACME			■				
–	6	2,0	2,5	–	22ER6ACME			■					22EL6ACME			■				
–	5	2,0	2,3	–	22ER5ACME			■					22EL5ACME			■				
–	4	2,5	3,0	–	27ER4ACME			■					27EL4ACME			■				
–	3	–	3,2	–	20ER3ACME		■	■												
–	2	–	5,0	–	26ER2ACME		■	■												

■ Stock standard
Subject to change refer to current price- and stock-list

ACME – Internal Threading

Snap-Tap®

Partial profile

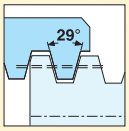

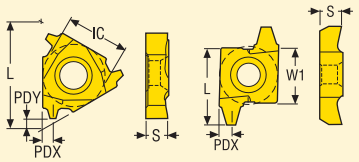

ANSI B1.5 - 1988
3G

Size	Dimensions in mm IC	W1	L	S
16	9,525	–	16,5	3,47
22	12,7	–	22,0	4,71
27	15,875	–	27,0	6,15
20	–	12,7	20,0	6,3
26	–	15,875	26,0	7,88

16NR/22Nx/27NR

20NR/26NR

Pitch mm	Pitch TPI	Dimensions in mm PDY	PDX	RE	Insert Part No. Right	Grades Coated CP200	CP300	CP500	TTP2050	Uncoated H15			Insert Part No. Left	Grades Coated CP200	CP300	CP500	TTP2050	Uncoated H15		
–	16	0,9	0,8	–	16NR16ACME			■												
–	12	1,3	1,5	–	16NR12ACME			■												
–	10	1,3	1,5	–	16NR10ACME			■												
–	8	1,3	1,5	–	16NR8ACME			■												
–	6	2,0	2,5	–	22NR6ACME		■	■												
–	5	2,0	2,3	–	22NR5ACME			■					22NL5ACME			■				
–	4	2,5	3,0	–	27NR4ACME		■	■												
–	3,5	–	3,2	–	20NR3.5ACME		■	■												
–	3	–	3,2	–	20NR3ACME		■	■												
–	2	–	5,0	–	26NR2ACME		■													

■ Stock standard
Subject to change refer to current price- and stock-list

Stub-ACME – External Threading

Snap-Tap®

Partial profile

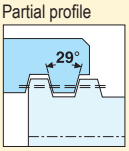

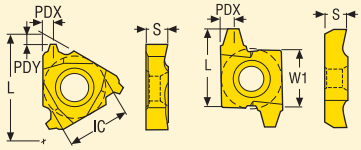

ANSI B1.8 - 1988
2G

Size	Dimensions in mm IC	W1	L	S
16	9,525	–	16,5	3,47
22	12,7	–	22,0	4,71
27	15,875	–	27,0	6,15
20	–	12,7	20,0	6,3
26	–	15,875	26,0	7,88

16ER

16ER/22Ex/27ER

20ER/26ER

Pitch mm	Pitch TPI	Dimensions in mm PDY	PDX	RE	Insert Part No. Right	Grades Coated CP200	CP300	CP500	TTP2050	Uncoated H15			Insert Part No. Left	Grades Coated CP200	CP300	CP500	TTP2050	Uncoated H15		
–	14	1,3	1,5	–	16ER14STACME			■												
–	12	1,5	1,5	–	16ER12STACME			■												
–	10	1,5	1,5	–	16ER10STACME			■												
–	8	1,8	1,5	–	16ER8STACME		■	■												
–	6	2,4	2,5	–	22ER6STACME			■					22EL6STACME			■				
–	5	2,0	2,1	–	22ER5STACME			■												
–	4	2,6	2,8	–	27ER4STACME		■	■												
–	3	–	3,2	–	20ER3STACME			■												
–	2	–	5,0	–	26ER2STACME			■												

■ Stock standard
Subject to change refer to current price- and stock-list

Stub-ACME – Internal Threading

Snap-Tap®

Partial profile

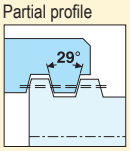

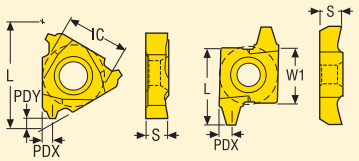

ANSI B1.8 - 1988
2G

Size	Dimensions in mm IC	W1	L	S
16	9,525	–	16,5	3,47
22	12,7	–	22,0	4,71
27	15,875	–	27,0	6,15
20	–	12,7	20,0	6,3

16NR

16NR/22NR/27NR

20NR

Pitch mm	Pitch TPI	Dimensions in mm PDY	PDX	RE	Insert Part No. Right	Grades Coated CP200	CP300	CP500	TTP2050	Uncoated H15			Insert Part No. Left	Grades Coated CP200	CP300	CP500	TTP2050	Uncoated H15		
–	14	1,3	1,5	–	**16NR14STACME**			■												
–	12	1,5	1,5	–	**16NR12STACME**			■												
–	10	1,5	1,5	–	**16NR10STACME**			■												
–	8	1,8	1,5	–	**16NR8STACME**		■	■												
–	6	2,4	2,5	–	**22NR6STACME**			■												
–	5	2,0	2,1	–	**22NR5STACME**			■												
–	4	2,6	2,8	–	**27NR4STACME**		■	■												
–	3	–	3,2	–	**20NR3STACME**			■												

■ **Stock standard**
Subject to change refer to current price- and stock-list

API Rotary Drilling connection - External threading

Snap-Tap®

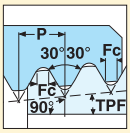

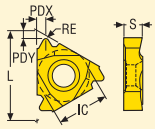

API spec. 7 - 1998

Size	Dimensions in mm IC	L	S
22	12,7	22,0	4,71
27	15,875	27,0	6,15

22ER/27ER

Pitch TPI	Dimensions in mm PDY	PDX	APICODE	TGTPF	RE	CTF	Designation	Grades Coated CP200	CP300	CP500	TTP2050	Uncoated H15		
5,0	2,0	2,5	V040	3	0,508	1,016	22ER5API404		■	■				
4,0	1,95	2,55	V038R	2	0,965	1,651	22ER4API386		■	■				
5,0	2,2	3,2	V040	3	0,508	1,016	27ER5API404		■	■				
4,0	2,2	3,2	V038R	3	0,965	1,651	27ER4API384	■		■				
4,0	2,2	3,2	V038R	2	0,965	1,651	27ER4API386	■	■	■				
4,0	2,2	3,2	V050	3	0,635	1,27	27ER4API504	■	■	■				
4,0	2,2	3,2	V050	2	0,635	1,27	27ER4API506	■	■	■				

API Rotary Drilling connection - Internal threading

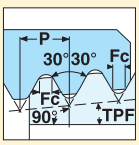

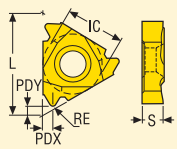

API spec. 7 - 1998

Size	Dimensions in mm IC	L	S
22	12,7	22,0	4,71
27	15,875	27,0	6,15

22NR/27NR

Pitch TPI	Dimensions in mm PDY	PDX	APICODE	TGTPF	RE	CTF	Designation	Grades Coated CP200	CP300	CP500	TTP2050	Uncoated H15		
5,0	2,0	2,5	V040	3	0,508	1,016	22NR5API404		■	■				
4,0	1,9	2,5	V038R	2	0,965	1,651	22NR4API386		■	■		■		
5,0	2,2	3,2	V040	3	0,508	1,016	27NR5API404		■					
4,0	2,2	3,2	V038R	3	0,965	1,651	27NR4API384	■		■				
4,0	2,2	3,2	V038R	2	0,965	1,651	27NR4API386	■	■	■				
4,0	2,2	3,2	V050	3	0,635	1,27	27NR4API504	■	■	■				
4,0	2,2	3,2	V050	2	0,635	1,27	27NR4API506	■	■	■				

■ Stock standard
Subject to change refer to current price- and stock-list

Rotary drill connection - External threading

Snap-Tap®

HEF = Hughes External Flush

904/906 = Hughes H90

H90 = Hughes Slimline H90

PAC = P.A.C.

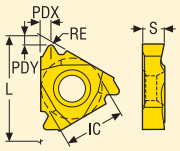

Size	Dimensions in mm IC	L	S
22	12,7	22,0	4,71
27	15,875	27,0	6,15

HEF

904/906

H90

PAC

Pitch TPI	Pitch TPI	Dimensions in mm PDY	Dimensions in mm PDX	APICODE	TGTPF	Designation	Grades Coated CP200	Coated CP300	Coated CP500	Coated TTP2050	Uncoated H15	Uncoated	Uncoated
6,0	6,0	2,0	2,5	–	2	**22ER6HEF**			■				
3,5	3,5	2,7	3,5	90V050	3	**27ER3.5H904**			■				
3,5	3,5	2,7	3,5	90V050	2	**27ER3.5H906**			■				
3,0	3,0	3,5	3,6	90V050	1,25	**27ER3H90**			■				
4,0	4,0	2,4	2,63	V076	1,5	**22ER4PAC**			■				
4,0	4,0	2,75	3,2	V076	1,5	**27ER4PAC**			■				

■ **Stock standard**

Subject to change refer to current price- and stock-list

Rotary drill connection - Internal threading

Snap-Tap®

HEF = Hughes External Flush

904/906 = Hughes H90

H90 = Hughes Slimline H90

PAC = P.A.C.

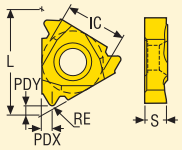

Size	Dimensions in mm IC	L	S
22	12,7	22,0	4,71
27	15,875	27,0	6,15

HEF

904/906

H90

PAC

Pitch TPI	Dimensions in mm PDY	PDX	APICODE	TGTPF	Designation	Grades: Coated CP200	CP300	CP500	TTP2050	Uncoated H15		
6,0	2,0	2,5	–	2	22NR6HEF			■				
3,5	2,7	3,5	90V050	3	27NR3.5H904			■				
3,5	2,7	3,5	90V050	2	27NR3.5H906			■				
3,0	3,5	3,6	90V050	1,25	27NR3H90			■				
4,0	2,4	2,6	V076	1,5	22NR4PAC			■				
4,0	2,75	3,2	V076	1,5	27NR4PAC			■				

■ Stock standard

Subject to change refer to current price- and stock-list

API Spec. 5B ROUND - External Threading

Snap-Tap®

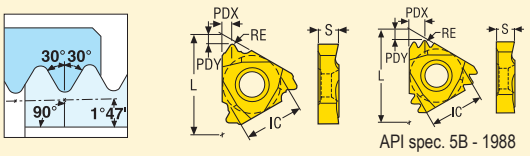

Size	Dimensions in mm IC	L	S
16	9,525	16,5	3,47
22	12,7	22,0	4,71
27	15,875	27,0	6,15

16ER

22ER/27ER..M

Pitch mm	Pitch TPIN	Dimensions in mm PDY	PDX	RE	Insert Part No. Right	Grades Coated CP200	CP300	CP500	TTP2050	Uncoated H15			Insert Part No. Left	Grades Coated CP200	CP300	CP500	Uncoated H15		
–	10,0	1,5	1,5	0,38	16ER10APIRD			■											
–	8,0	1,5	1,5	0,46	16ER8APIRD			■											
–	10,0	2,4	3,7	0,38	22ER10APIRD2M			■											
–	8,0	2,9	4,5	0,46	27ER8APIRD2M		■												

API Spec. 5B ROUND - Internal Threading

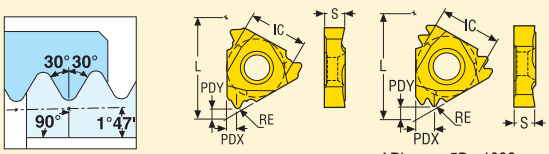

Size	Dimensions in mm IC	L	S
16	9,525	16,5	3,47
27	15,875	27,0	6,15

16NR

27NR..M

Pitch mm	Pitch TPIN	Dimensions in mm PDY	PDX	RE	Insert Part No. Right	Grades Coated CP200	CP300	CP500	TTP2050	Uncoated H15			Insert Part No. Left	Grades Coated CP200	CP300	CP500	Uncoated H15		
–	10,0	1,5	1,5	0,38	16NR10APIRD			■											
–	8,0	1,5	1,5	0,46	16NR8APIRD			■											
–	8,0	2,9	4,5	0,46	27NR8APIRD2M		■												

■ Stock standard
Subject to change refer to current price- and stock-list

API 5B BUTTRESS, VAM BUTTRESS 1:16 Taper - External Threading

Snap-Tap®

Crest and root are parallel to taper

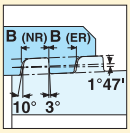

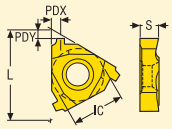

Vallourec ST-D453.02
API spec. 5B - 1988

Size	Dimensions in mm IC	L	S
22	12,7	22,0	4,71

22ER

Pitch mm	Pitch TPIN	Dimensions in mm PDY	PDX	RE	TGTPF	Insert Part No. Right	Grades Coated CP200	CP300	CP500	TTP2050	Uncoated H15		
–	5,0	2,2	2,5	–	3/4"	22ER5BUT2.5			■				
–	6,0	2,2	2,5	–	3/4"	22ER6VAM			■				

API 5B BUTTRESS, VAM BUTTRESS 1:16 Taper - Internal Threading

Crest and root are parallel to taper

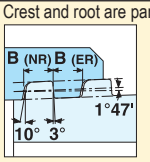

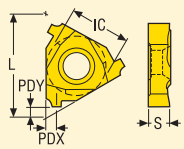

Vallourec ST-D453.02
API spec. 5B - 1988

Size	Dimensions in mm IC	L	S
22	12,7	22,0	4,71

22NR

Pitch mm	Pitch TPIN	Dimensions in mm PDY	PDX	RE	TGTPF	Insert Part No. Right	Grades Coated CP200	CP300	CP500	TTP2050	Uncoated H15		
–	5,0	2,0	2,1	–	3/4"	22NR5BUT2.5		■	■				
–	6,0	2,0	2,0	–	3/4"	22NR6VAM		■	■				
–	5,0	2,0	2,0	–	3/4"	22NR5VAM			■				

■ Stock standard
Subject to change refer to current price- and stock-list

API BUTTRESS 1:12 Taper - External Threading

Snap-Tap®

Crest and root are parallel to axis

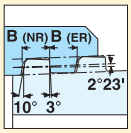

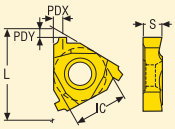

API spec. 5B - 1988

Size	Dimensions in mm IC	L	S
22	12,7	22,0	4,71

22ER

Pitch mm	Pitch TPIN	Dimensions in mm PDY	PDX	RE	TGTPF	Insert Part No. Right	Grades Coated CP200	CP300	CP500	TTP2050	Uncoated H15		
–	5,0	2,2	2,5	–	1	22ER5BUT2.6			■				

API BUTTRESS 1:12 Taper - Internal Threading

Crest and root are parallel to axis

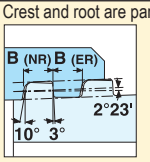

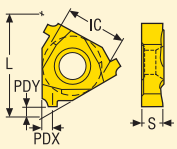

API spec. 5B - 1988

Size	Dimensions in mm IC	L	S
22	12,7	22,0	4,71

22NR

Pitch mm	Pitch TPIN	Dimensions in mm PDY	PDX	RE	TGTPF	Insert Part No. Right	Grades Coated CP200	CP300	CP500	TTP2050	Uncoated H15		
–	5,0	2,0	2,1	–	1	22NR5BUT2.6			■				

■ Stock standard
Subject to change refer to current price- and stock-list

Chasers

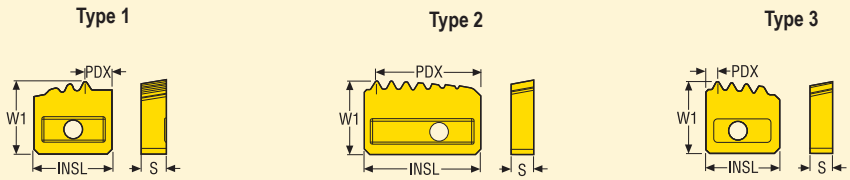

Pitch	Int./Ext.	Type	Dimensions in mm INSL	W1	S	PDX	NT	Designation	Thread Form Product	CHF1	Grades Coated CP250T	CP500T	TP150T
8	External	1	15.875	15.875	4.76	5.6	3	8-1116	API_RD_CAS_8TPI_EXT,	C-1005-4	■		
8	Internal	3	15.875	15.875	4.76	2.5	4	8-1128	API_RD_8TPI_INT,	C-1002-96	■		
8	Internal	3	25.0	15.875	5.0	2.5	7	8-5111	API_RD_8TPI_INT	C-5002-96	■		
8	External	1	20.0	15.875	4.76	10.19	3	8-4133-1	API_RD_8TPI_EXT_CASING_1	C-4003-4	■		
8	External	1	20.0	15.875	4.76	8.6	3	8-4133-2	API_RD_8TPI_EXT_CASING_2	C-4003-4	■		
8	External	1	16.0	14.62	5.2	7.697	3	8-2115-1	API_RD_8TPI_CAS_3/4_TPF_1PMC	–	■		
8	External	1	16.0	14.87	5.2	6.638	3	8-2115-2	API_RD_8TPI_CAS_3/4_TPF_2PMC	–	■		
8	External	1	16.0	15.0	5.2	5.58	3	8-2115-3	API_RD_8TPI_CAS_3/4_TPF_3PMC	–	■		
8	External	1	15.875	15.875	4.76	5.6	3	8-1117	API_RD_TUBING_8TPI_EXT,	C-1005-4	■		
8	External	1	16.0	14.62	5.2	7.697	3	8-2118-1	API_RD_8TPI_TUB_3/4_TPF_1PMC	–	■		
8	External	1	16.0	14.87	5.2	6.638	3	8-2118-2	API_RD_8TPI_TUB_3/4_TPF_2PMC	–	■		
8	External	1	16.0	15.0	5.2	5.58	3	8-2118-3	API_RD_8TPI_TUB_3/4_TPF_3PMC	–	■		
10	Internal	3	15.875	15.875	4.76	5.0	4	10-1120	API_RD_10TPI_TUB_INT	C-1001-96	■		
10	External	1	15.875	15.875	4.76	4.4	3	10-1133-2	API_RD_10TPI_TUB_EXT_2	C-1001-4	■		
5	External	1	15.875	15.875	4.76	2.1	3	5-1102	API_BUTTRESS_5TPI_1/16_EXT	C-1004-4	■		
5	External	1	25.0	15.875	5.0	2.0	5	5-5102	API_BUTRESS_5_TPI_1/16_EXT,	C-5003-4	■	■	■
5	Internal	3	15.875	15.875	4.76	2.5	3	5-1113	API_BUTTRESS_5TPI_1/16_INT,	C-1018-96	■		
5	Internal	3	25.0	15.875	5.0	1.964	5	5-5112-C	API_BUTTRESS_5TPI_1/16_INT	C-5003-96	■	■	
5	Internal	3	25.0	15.875	5.0	2.5	5	5-5108	API_BUTTRESS_5TPI_1/16_INT	C-5003-96	■		
5	Internal	2	15.875	15.875	4.76	13.375	3	5-1134	API_BUTT_5TPI_CAS_1/16_INTPUL	C-1018-96	■		
5	Internal	2	25.0	15.875	5.0	22.5	5	5-5110	API_BUTT_5TPI_1/16_INTPULLING	C-5003-96	■		
5	External	1	20.0	15.692	4.76	4.84	3	5-4131-1	API_BUTTRESS_1/16_5TPI_EXT_1	C-4001-4	■		
5	External	1	20.0	15.875	4.76	2.3	4	5-4131-2	API_BUTTRESS_1/16_5TPI_EXT_2	C-4001-4	■		
5	External	1	17.0	14.57	4.76	5.552	3	5-3105-1	API_BUTTRESS_5TPI_1/16_EXT_1	C-3901-1	■		
5	External	1	17.0	14.825	4.76	3.858	3	5-3105-2	API_BUTTRESS_5TPI_1/16_EXT_2	C-3901-2	■		
5	External	1	17.0	14.98	4.76	2.165	3	5-3105-3	API_BUTTRESS_5TPI_1/16_EXT_3	C-3901-3	■		

Chipformers

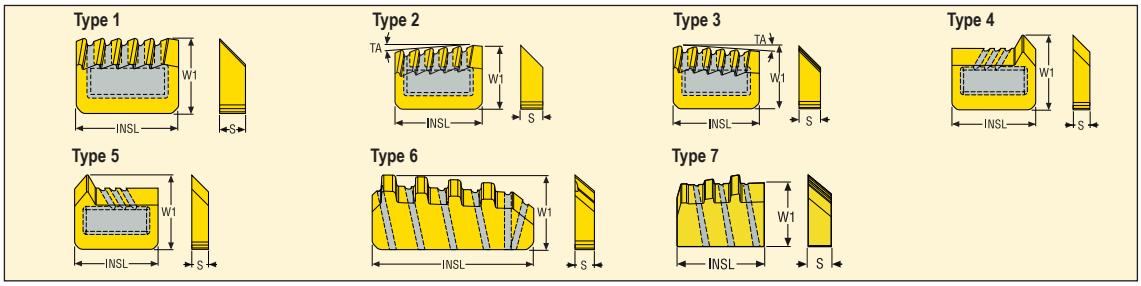

Type	Designation	Dimensions in mm		
		INSL	W1	S
1	C-1001	15,7	11,5	3,97
2	C-1001-4	15,7	11,5	3,97
3	C-1001-96	15,7	11,5	3,97
1	C-1002	15,7	11,5	3,97
2	C-1002-4	15,7	11,5	3,97
3	C-1002-96	15,7	11,5	3,97
1	C-1003	15,7	11,5	3,97
1	C-1004	15,7	11,5	3,97
2	C-1004-4	15,7	11,5	3,97
3	C-1004-96	15,7	11,5	3,97
2	C-1005-4	15,7	11,5	3,97
3	C-1005-96	15,7	11,5	3,97
2	C-1006-4	15,7	11,5	3,97
1	C-1009	15,7	11,5	3,97
1	C-1009-4	15,7	11,5	3,97
3	C-1009-96	15,7	11,5	3,97
1	C-1010	15,7	11,5	3,97
2	C-1010-4	15,7	11,5	3,97
3	C-1010-96	15,7	11,5	3,97
3	C-1013-96	15,7	11,5	3,97
1	C-1018	15,7	11,5	3,97
3	C-1018-96	15,7	11,5	3,97
3	C-1021-96	15,7	11,5	3,97
4	C-1022	15,7	11,5	3,18
5	C-1023	15,7	11,5	3,18
4	C-1024	15,7	11,5	3,97
5	C-1025	15,7	11,5	3,97
5	C-1032	15,7	11,5	3,18
4	C-1033	15,7	11,5	3,18
5	C-1034	15,7	11,5	3,18
4	C-1035	15,7	11,5	3,18
3	C-1601-96	15,7	12,5	3,97
2	C-1604-4	15,7	12,5	3,97
4	C-1X37-I-145	15,7	14,5	3,18
5	C-1X38-I-145	15,7	14,5	3,18
4	C-1X39-I-145	15,7	14,5	3,18
5	C-1X40-I-145	15,7	14,5	3,18
4	C-1X41-I-145	15,7	14,5	3,18
5	C-1X42-I-145	15,7	14,5	3,18
4	C-9001-I	12,6	11,5	3,18
7	C-3901-1	16,9	13,9	4,47
7	C-3901-2	16,9	14,0	4,47
7	C-3901-3	16,9	14,2	4,47
2	C-4001-4	19,8	11,5	3,97
2	C-4003-4	19,8	11,5	3,97
2	C-5001-4	24,8	11,5	3,97
3	C-5001-96	24,8	11,5	3,97
2	C-5002-4	24,8	11,5	3,97
3	C-5002-96	24,8	11,5	3,97
1	C-5003	24,8	11,5	3,97
2	C-5003-4	24,8	11,5	3,97
3	C-5003-96	24,8	11,5	3,97
1	C-5005	24,8	11,5	3,0

Chipformers

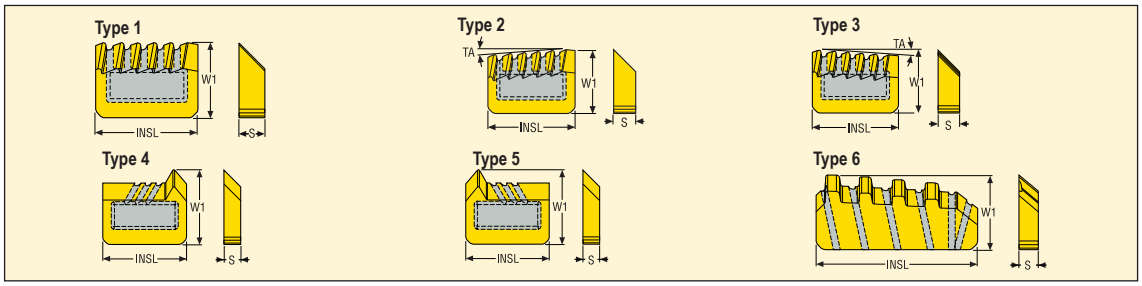

Type	Designation	Dimensions in mm		
		INSL	W1	S
1	C-5006	24,8	11,5	3,0
6	C-5705-G	24,8	13,0	3,0
6	C-5803-4	24,8	13,5	3,97
6	C-5805-G	24,8	13,5	3,0
6	C-5905-G	24,8	14,0	3,0
4	C-9001-I	12,6	11,5	3,18

Toolholders for inserts LCGN

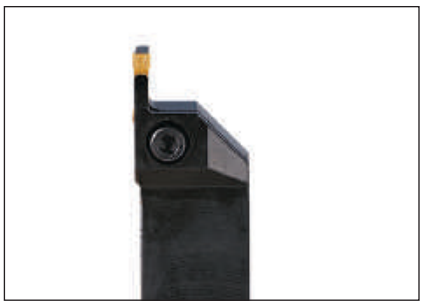

• For inserts programme, see page(s) 128-129

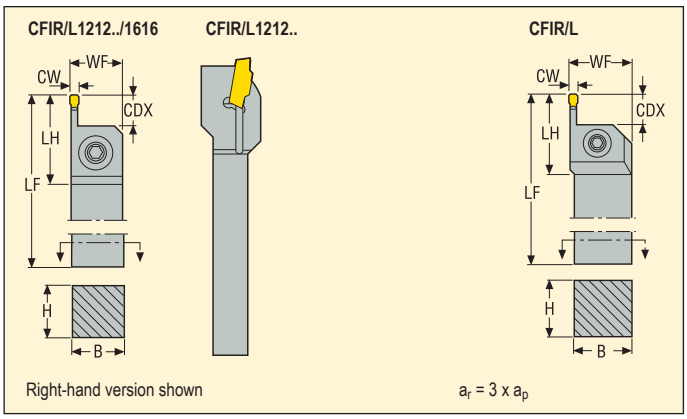

Application	Designation	Dimensions in mm H	B	LF	WF	LH	CDX	KG	
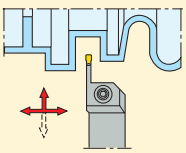	CFIR1212M03	12,0	12,0	150,0	12,0	31,0	9,0	0,2	LC..1603..
	CFIR1616H03	16,0	16,0	100,0	16,0	28,0	9,0	0,2	LC..1603..
	CFIR2020K03	20,0	20,0	125,0	21,5	28,0	9,0	0,4	LC..1603..
	CFIR2525M03	25,0	25,0	150,0	26,5	28,0	9,0	0,7	LC..1603..
	CFIR3225P03	32,0	25,0	170,0	26,5	28,0	9,0	1,0	LC..1603..
	CFIL1212M03	12,0	12,0	150,0	12,0	31,0	9,0	0,2	LC..1603..
	CFIL1616H03	16,0	16,0	100,0	16,0	28,0	9,0	0,2	LC..1603..
	CFIL2020K03	20,0	20,0	125,0	21,5	28,0	9,0	0,4	LC..1603..
	CFIL2525M03	25,0	25,0	150,0	26,5	28,0	9,0	0,7	LC..1603..
	CFIL3225P03	32,0	25,0	170,0	26,5	28,0	9,0	1,0	LC..1603..

Spare Parts, Parts included in delivery

For holder	Clamp screw	Clamp key	Torque value (Nm)
..1212M03	TCEI0409	3SMS795	2,5
..1616H03	TCEI0509	4SMS795	6,0
..2020K03	TCEI0513	4SMS795	6,0
..2525M03	TCEI0513	4SMS795	6,0
..3225P03	TCEI0513	4SMS795	6,0
..1212M03	TCEI0409	3SMS795	6,0

Please check availability in current price and stock-list

LCGN – Partial profile 55°

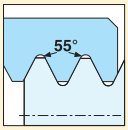

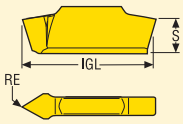

Tolerances:
IGL = ±0,025
RE = ±0,025

Size	Dimensions in mm IGL	S	RE
-A55	16,6	4,5	0,08
-G55	16,6	4,5	0,18

Pitch mm	Pitch TPI	Insert Part No. Right	Grades Coated CP500	CP600	TK150	TGP25	
0,5-1,5	48,0-16,0	LCGN1603-A55	■				
1,75-3,0	14,0-8,0	LCGN1603-G55	■				

Helix angle not to exceed λ +2°

LCGN – Partial profile 60°

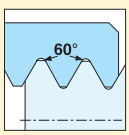

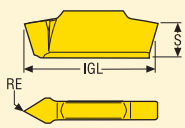

Tolerances:
IGL = ±0,025
RE = ±0,025

Size	Dimensions in mm IGL	S	RE
-A60	16,6	4,5	0,08
-G60	16,6	4,5	0,18

Pitch mm	Pitch TPI	Insert Part No. Right	Grades Coated CP500	CP600	TK150	TGP25	
0,5-1,5	48,0-16,0	LCGN1603-A60	■				
1,75-3,0	14,0-8,0	LCGN1603-G60	■				

Helix angle not to exceed λ +2°

■ **Stock standard**
Subject to change refer to current price- and stock-list

LCGN – ISO Metric

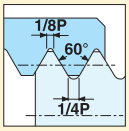

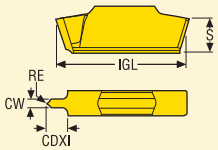

Tolerances:
IGL = ±0,025

Size	Dimensions in mm CW	IGL	S	CDX	RE
-E0.5	0,75	16,6	4,5	1,9	0,07
-E0.8	1,2	16,6	4,5	3,0	0,11
-E1.0	1,5	16,6	4,5	3,75	0,13
-E1.25	1,88	16,6	4,5	4,2	0,17
-E1.5	2,4	16,6	4,5	–	0,21

Pitch mm	Insert Part No. Right	Note	Grades Coated CP500	CP600	TK150	TGP25	
0,50	LCGN1603-E0.5ISO	*	■				
0,80	LCGN1603-E0.8ISO	*	■				
1,00	LCGN1603-E1.0ISO	*	■				
1,25	LCGN1603-E1.25ISO	*	■				
1,50	LCGN1603-E1.5ISO	–	■				

■ Stock standard
Subject to change refer to current price- and stock-list

Helix angle not to exceed λ +2°
*Toolholders have to be modified

Toolholders for inserts LCEX

- For inserts programme, see page(s) 131-135

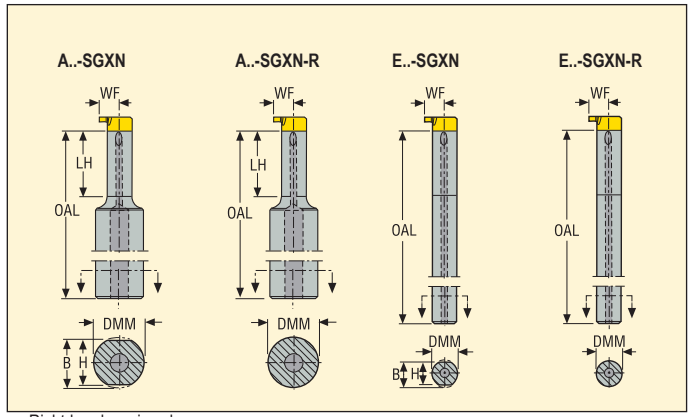

Right-hand version shown

Application	Designation	Dimensions in mm DMM	H	B	LF	WF	LH	DCINN	KG	
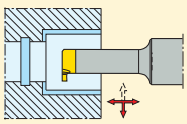	A12G-SGXN08-20	12,0	11,0	11,5	16,5	4,8	16,5	8,0	0,1	LCEX08..
	A12G-SGXN08-20-R	12,0	–	–	16,5	4,8	16,5	8,0	0,1	LCEX08..
	A16H-SGXN11-25	16,0	15,0	15,5	21,0	6,7	21,0	11,0	0,2	LCEX11..
	A16H-SGXN11-25-R	16,0	–	–	21,0	6,7	21,0	11,0	0,2	LCEX11..
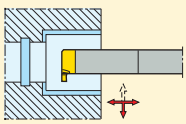	E06G-SGXN08	6,0	5,5	5,75	36,0	4,8	–	8,0	0,1	LCEX08..
	E06G-SGXN08-R	6,0	–	–	36,0	4,8	–	8,0	0,1	LCEX08..
	E08H-SGXN11	8,0	7,3	7,65	48,0	6,7	–	11,0	0,1	LCEX11..
	E08H-SGXN11-R	8,0	–	–	48,0	6,7	–	11,0	0,1	LCEX11..

Spare Parts, Parts included in delivery

For holder	Insert key	Insert screw
A12G..-	T08P-2	C02506-T08P
A16H-..	T10P-2	C03509-T10P
E06G-..	T08P-2	C02506-T08P
E08H-..	T10P-2	C03509-T10P

Please check availability in current price and stock-list

Threading – Partial Profile 60°

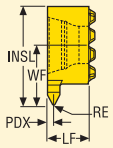

Size	Dimensions in mm WF	INSL	LF
8	4,78	7,78	3,3
11	6,7	10,7	4,0

..R

..L

Pitch mm	Pitch TPI	Dimensions in mm PDX	Dimensions in mm RE	Designation	Grades Coated CP200	Coated CP300	Coated CP500	Coated	Uncoated H15	Uncoated	Uncoated
0,5-0,75	48,0-36,0	0,48	0,03	LCEX0804-A60R			■				
0,5-0,75	48,0-36,0	0,48	0,03	LCEX0804-A60L			■				
0,75-1,25	36,0-20,0	0,73	0,07	LCEX0804-AG60R			■				
0,75-1,25	36,0-20,0	0,73	0,07	LCEX0804-AG60L			■				
1,25-1,75	20,0-16,0	0,98	0,12	LCEX0804-G60R			■				
1,25-1,75	20,0-16,0	0,98	0,12	LCEX0804-G60L			■				
0,5-0,75	48,0-36,0	0,48	0,03	LCEX1105-A60R			■				
0,5-0,75	48,0-36,0	0,48	0,03	LCEX1105-A60L			■				
0,75-1,25	36,0-20,0	0,73	0,07	LCEX1105-AG60R			■				
0,75-1,25	36,0-20,0	0,73	0,07	LCEX1105-AG60L			■				
1,25-1,75	16,0-20,0	0,98	0,12	LCEX1105-G60R			■				
1,25-1,75	20,0-16,0	0,98	0,12	LCEX1105-G60L			■				

■ Stock standard
Subject to change refer to current price- and stock-list

Threading – ISO Metric

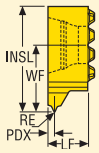

Size	Dimensions in mm WF	INSL	LF
11	6,7	10,7	4,0

..R

..L

Pitch mm	Pitch TPI	Dimensions in mm PDX	Dimensions in mm RE	Designation	Grades Coated CP200	Coated CP300	Coated CP500	Coated	Uncoated H15	Uncoated	Uncoated
1,0	–	0,6	0,07	LCEX1105-1.0ISOR			■				
1,0	–	0,6	0,07	LCEX1105-1.0ISOL			■				
1,5	–	0,85	0,12	LCEX1105-1.5ISOR			■				
1,5	–	0,8	0,12	LCEX1105-1.5ISOL			■				
2,0	–	1,1	0,17	LCEX1105-2.0ISOR			■				
2,0	–	1,1	0,17	LCEX1105-2.0ISOL			■				
2,5	–	1,35	0,18	LCEX1105-2.5ISOR			■				
2,5	–	1,35	0,18	LCEX1105-2.5ISOL			■				
3,0	–	1,6	0,21	LCEX1105-3.0ISOR			■				
3,0	–	1,6	0,21	LCEX1105-3.0ISOL			■				

■ Stock standard
Subject to change refer to current price- and stock-list

Threading – Whitworth, BSW

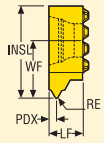

Size	Dimensions in mm WF	INSL	LF
11	6,7	10,7	4,0

..R

..L

Pitch mm	Pitch TPI	Dimensions in mm PDX	RE	Designation	Grades Coated CP200	CP300	CP500		Uncoated H15		
–	19,0	0,77	0,15	LCEX1105-19WR			■				
–	19,0	0,77	0,15	LCEX1105-19WL			■				
–	14,0	1,0	0,24	LCEX1105-14WR			■				
–	14,0	1,0	0,24	LCEX1105-14WL			■				

Threading – TR-DIN103

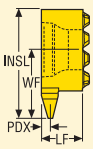

Size	Dimensions in mm WF	INSL	LF
11	6,7	10,7	4,0

..RR

..RL

Pitch mm	Pitch TPI	Dimensions in mm PDX	Designation	Grades Coated CP200	CP300	CP500		Uncoated H15		
1,5	–	0,8	LCEX1105-1.5TRR			■				
1,5	–	0,8	LCEX1105-1.5TRL			■				
2,0	–	1,1	LCEX1105-2.0TRR			■				
2,0	–	1,1	LCEX1105-2.0TRL			■				
3,0	–	1,6	LCEX1105-3.0TRR			■				
3,0	–	1,6	LCEX1105-3.0TRL			■				

■ Stock standard
Subject to change refer to current price- and stock-list

Threading - UN

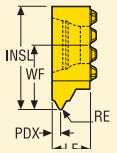

Size	Dimensions in mm WF	INSL	LF
8	4,78	7,78	3,3

..R

..L

Pitch mm	Pitch TPI	Dimensions in mm PDX	Dimensions in mm RE	Designation	Grades Coated CP200	Coated CP300	Coated CP500	Coated	Uncoated H15	Uncoated	Uncoated
–	32,0	0,5	0,04	LCEX0804-32UNR			■				
–	32,0	0,5	0,04	LCEX0804-32UNL			■				
–	24,0	0,6	0,07	LCEX0804-24UNR			■				
–	24,0	0,6	0,07	LCEX0804-24UNL			■				
–	20,0	0,7	0,09	LCEX0804-20UNR			■				
–	20,0	0,7	0,09	LCEX0804-20UNL			■				
–	16,0	0,9	0,13	LCEX0804-16UNR			■				
–	16,0	0,9	0,13	LCEX0804-16UNL			■				

■ Stock standard
Subject to change refer to current price- and stock-list

Threading – NPT

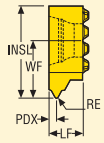

Size	Dimensions in mm WF	INSL	LF
8	4,78	7,78	3,3

..R

..L

Pitch mm	Pitch TPI	Dimensions in mm PDX	RE	Designation	Grades Coated CP200	CP300	CP500		Uncoated H15		
–	27,0	0,57	0,03	LCEX0804-27NPTR			■				
–	27,0	0,57	0,03	LCEX0804-27NPTL			■				

Threading – NPTF

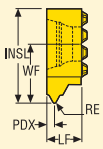

Size	Dimensions in mm WF	INSL	LF
8	4,78	7,78	3,3

..R

..L

Pitch mm	Pitch TPI	Dimensions in mm PDX	RE	Designation	Grades Coated CP200	CP300	CP500		Uncoated H15		
–	27,0	0,57	0,04	LCEX0804-27NPTFR			■				
–	27,0	0,57	0,04	LCEX0804-27NPTFL			■				

■ Stock standard
Subject to change refer to current price- and stock-list

Range overview

Threading	∅ Range	Length
Threadmaster™ Page(s) 151-154	M1-M20	~ 1,5-2 x D
R396.18/19/20 Page(s) 155-157	14 ≤	~ 2 - 3.5 x D
Threadmaster™ Taps Page(s) 168-269	M1-M64	~ 1,5–3,5 x D

Versatile & Specific

Thread milling and Tapping – Choice of tool

Product Strategy

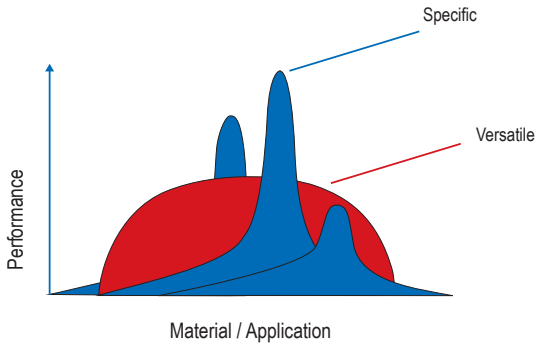

Continuous research and development of better materials, coatings and optimal geometries help fulfil customer´s requirements. Our product strategy is to provide the market with versatile first choice tools and specific optimized solutions for threading.

Product Assortment

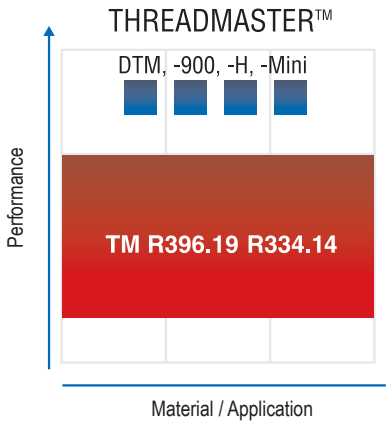

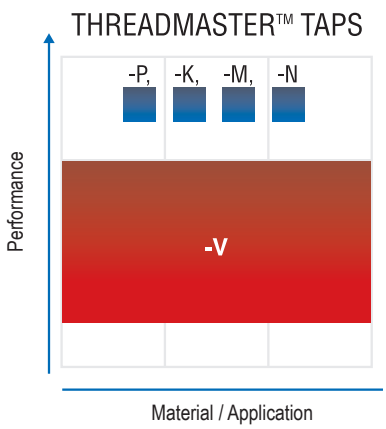

Thread milling – Choice of cutter, inserts and cutting data
Solid carbide cutter – Threadmaster™

1. General

The same cutter can be used for machining both right and left hand threads. Metric and UN versions are only for internal threading.
The remaining of the range can be used for both external and internal threading.

- The cutters are regrindable

2. Select cutter diameter

- Look up the pages with the Threadmaster programmes
- Look up the column for the required thread type
- Look up the required pitch
- When more alternatives are available note that:

- Smaller cutter diameter allows smaller threading diameter (minimum thread diameter is found in the designation).

- Larger cutter diameter allows larger threading depth (maximum threading depth is 2 x cutter diameter, D_c).

3. Selection of cutter

- TM: Basic choice
- TM...-900: Choice for steel and stainless steel with tensile strength > 900 N/mm^2
- TM...-H: Choice for hardened steel with hardness 45-60 HRC
- DTM: Drill, thread and chamfer with same tool. To be used in aluminium and cast iron

4. Select cutting data

- Use the tables beginning on page 270 to classify the workpiece material into a SMG (Seco Material Group)
- Cutting speed recommendations are found on the cutting data page for Threadmaster
- Feed per tooth (= flute) recommendations are found on the cutting data page for Threadmaster
- Formulae for cutting data calculation are on page 141
- For best suggestion and performance use Seco Suggest https://www.secotools.com/#dashboard/Suggest/Suggest or Seco Threading Wizard https://www.secotools.com/#dashboard/Portal/ThreadingWizard for best performance.

5. Machining methods

- Helical interpolation must be used to create the pitch
- Clockwise or counterclockwise feed direction can be used depending on thread type and machining method (right or left hand), external or internal thread
- Climb milling is recommended
- Coolant supply is recommended. Except when threading hardened material
- Special machining recommendations for certain workpiece materials are found on the cutting data page for Threadmaster

Feed recommendations

Threadmaster™:

- Feed recommendations for TM-M4X0.7ISO-6R1 except for TM-Mini, that recommendation is for TM-M1.0X0.25ISO-3R1-H and only a start value
- For best suggestion and performance use Seco Suggest https://www.secotools.com/#dashboard/Suggest/Suggest or Seco Threading Wizard https://www.secotools.com/#dashboard/Portal/ThreadingWizard for best performance.
- All feed are related to the centre of the cutter and not the periphery
- In the entrance loop reduce feed by 50%. In the exit loop increase feed by 50%
- In the entrance and exit loop feed the cutter 15% of the pitch axially
- For free cutting steel, low alloy and ferritic steel, quench & temper steel, low to medium alloy stainless steels and austenitic cast irons, leave 0,05 mm in a_e for a finishing cut
- For high strength steels, martensitic and high alloy stainless steels, Ni-based superalloys and titanium alloys remove 2/3 of a_e in the first cut and the remaining 1/3 in the second cut
- For hardened steels remove 1/3 of a_e in the first cut, 1/3 of a_e in the second cut and the remaining 1/3 in the third cut
- For NPT and NPTF threads take the whole a_e in one cut
- Coolant is recommended (except when using -H in hardened materials)
- The Metric and UN thread mills are only for internal threads

TM-Mini:

- Left-hand cutting (M4)
- Do the entrance loop before entering into the workpiece

DTM:

- Use peck drilling

Choice of cutter, inserts and cutting data

1. General

- The same cutter can be used for machining external and internal, right-hand and left-hand threads

2. Select cutter diameter

- Look up the pages for thread milling cutters and choose a suitable diameter in the tool data table
- The insert size varies with the cutter diameters. Check the available insert programme for the different sizes before deciding cutter diameter
- For internal thread milling check the 'minimum thread diameter' table before deciding cutter diameter. This table shows the relation between the cutter diameter and the smallest thread diameter to be machined

3. Select insert

- Look up the thread milling inserts pages and choose the required thread type in the correct insert size for the cutter. Choose the grade F30M/CP500 for general machining

4. Select cutting data

Radial cutting depth

- Use the formulae to calculate the radial cutting depth (a_e). (See figures)

Feed rate

- Divide the radial cutting depth with the cutter diameter to get the actual cutter engagement percentage (a_e/D_c%). Use the cutting data table to get a feed per tooth recommendation

Cutting speed

- Use the tables beginning at page 270 to classify the workpiece material into a SMG
- Cutting speed recommendations (for 10% engagement) are in the basic cutting speed table in the catalogue
- Maximum rpm that for safety reasons should never be exceeded, are shown on each product page
- Formulae for cutting data calculation are found on page 141

5. Machining methods

- Helical interpolation must be used to create the pitch
- Clockwise or counterclockwise feed direction can be used depending on thread type and machining method (right or left hand, external or internal thread)
- Climb milling and coolant is recommended

Internal

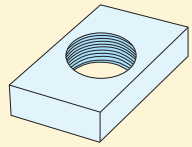

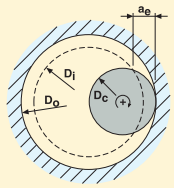

$D_i = D_o - 2h$

Thread	h
ISO	0,60 x p
UN	0,60 x p
W	0,69 x p
BSPT	0,69 x p
NPT	0,78 x p

Radial infeed value a_e:

$$a_e = \frac{D_o^2 - D_i^2}{4\,(D_o - D_c)}$$

p = pitch (mm)
h = depth of thread
D_c = Cutter dia mm
D_o = Major dia mm
D_i = Minor dia mm

External

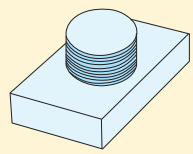

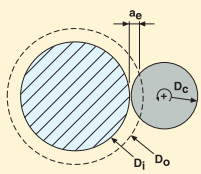

$D_i = D_o - 2h$

Thread	h
ISO	0,65 x p
UN	0,65 x p
W	0,69 x p
BSPT	0,69 x p
NPT	0,78 x p

Radial infeed value a_e:

$$a_e = \frac{D_o^2 - D_i^2}{4\,(D_i + D_c)}$$

p = pitch (mm)
h = depth of thread
D_c = Cutter dia mm
D_o = Major dia mm
D_i = Minor dia mm

Choice of cutter, inserts and cutting data – Threading Wizard

In order to simplify the selection of tools and cutting parameters Seco Tools introduce Suggest which eliminates complicated searching, programming and calculation as well as the application Threading Wizard which eliminate complicated programming and calculations.
Both applications can be found at https://www.secotools.com/#dashboard under applications
Suggest https://www.secotools.com/#dashboard/Suggest/Suggest or
Threading Wizard https://www.secotools.com/#dashboard/Portal/ThreadingWizard.

RPM	$n = \frac{v_c \cdot 1000}{\pi \cdot D_c}$	(rev/min)
Cutting speed	$v_c = \frac{n \cdot \pi \cdot D_c}{1000}$	(m/min)
Feed speed	$v_f = n \cdot z_n \cdot f_z$	(mm/min)
	$v_f = n \cdot z_c \cdot f_z$	(mm/min)
Feed per revolution	$f = z_n \cdot f_z$	(mm/rev)
	$f = z_c \cdot f_z$	(mm/rev)

D_c	=	Cutter diameter	mm
f	=	Feed per revolution	mm/rev
f_z	=	Feed per tooth	mm/tooth
z_c	=	Effective No. of teeth for calculation of feed speed or feed per rev	
n	=	RPM	rev/min
v_c	=	Cutting speed	m/min
v_f	=	Feed speed	mm/min
z_n	=	No. of teeth	

Disc Milling cutter 335.14

Disc milling cutter with exchangeable carbide head from diameter 9.7 mm

- A broad range of heads and shanks available for all your disc milling operation by circular interpolation or linear slotting.
- Strong, reliable and precise connection between the head and the cutter body.
- Cover all type of material with universal M geometry and F32M grade.

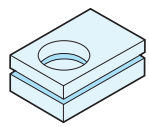

Threading: Head from dia 11,7 to 27,7 mm for partial metric threads with pitch 1-6 mm and full profile whitworth threads with pitch 19 to 11 tpi and UN threads with pitch 24 to 6 tpi.

Image shows exemplary application possibility with similar tool.

Pitch (as of/up to)

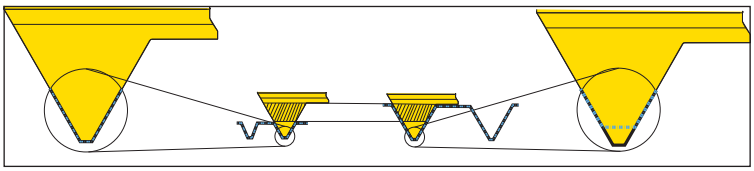

Actual Thread

Standard thread form

Thread milling by circular interpolation can cause thread profi le violation when using insert for partial thread. Keep this in mind during the process of selecting tool. The tool diameter need to be small enough compare to the hole diameter. The pitch also needs to be considered.

Insert with partial profile for Metric ISO-Threads are multi tools. That means that each insert could machine different pitches. The insert is designed to meet the minimum pitch size (TPN); Machining this pitch will result in a standard conform thread form.

The given maximum pitch size (TPX) can be machined also with this insert at the expense of standard conformity: The result will be a slightly deeper thread than the standard. The deeper thread is normally accepted, but the application and use needs to be evaluated.

Following table is a recommendation over maximum tool diameter in relation to the thread size and pitch:

ISO-Thread, partial profile

Pitch	M12	M16	M20	M24	M27	M30	M36	M42	M48	M56	M60
1	10	14	18	22	25	28	34	40	45	53	57
1,5	8	12	16	20	24	26	32	37	43	51	55
2	7	10	14	18	22	24	30	35	40	48	52
2,5	6	8	12	16	20	22	28	32	37	45	48
3		6	10	14	18	20	26	30	36	43	47
3,5				12	16	18	24	29	35	42	46
4							22	27	32	39	43
4,5								24	30	37	40
5								22	27	34	37
5,5								20	25	31	35
6								19	23	29	32

Righ hand

System

Internal thread (E = external, X = internal/external)

Pitch size (2,50-5,00 mm or ex. only a fixed pitch 2,5 mm, 16 tpi...)

No. of teeth

R 335 . 14 - 217 M N P 250500 - 12 Z3

Disc Milling code

Head diameter example: 21.7 mm

Thread type (W and UN)

Partial profile (F = full profile)

Connection size

Threadmaster™ – Cutting data

SMG	TM		TM-900		TM-H		TM-MINI	
	f_z	v_c	f_z	v_c	f_z	v_c	f_z	v_c
P1	0,010	145	—	—	—	—	—	—
P2	0,010	140	—	—	—	—	—	—
P3	0,0095	120	0,0042	120	—	—	—	—
P4	0,0095	105	0,0040	105	—	—	—	—
P5	0,0090	100	0,0040	100	—	—	—	—
P6	0,0090	115	0,0040	115	—	—	—	—
P7	0,0090	110	0,0040	110	—	—	—	—
P8	0,0095	100	0,0042	100	—	—	—	—
P11	0,0090	105	0,0040	105	—	—	—	—
P12	0,0060	60	0,0028	60	—	—	—	—
M1	0,010	100	0,0044	100	—	—	—	—
M2	0,0090	80	0,0040	80	—	—	—	—
M3	0,0075	60	0,0032	60	—	—	—	—
M4	0,0065	47	0,0028	47	—	—	—	—
M5	0,0065	39	0,0028	39	—	—	—	—
K1	0,010	145	0,0044	100	—	—	—	—
K2	0,0090	125	0,0040	90	—	—	—	—
K3	0,0090	105	0,0040	75	—	—	—	—
K4	0,0090	100	0,0040	70	—	—	—	—
K5	0,0080	60	0,0036	43	—	—	—	—
K6	0,0090	90	0,0040	65	—	—	—	—
K7	0,0080	80	0,0036	55	—	—	—	—
N1	0,013	395	0,0055	335	—	—	—	—
N2	0,013	255	0,0055	215	—	—	—	—
N3	0,013	170	0,0055	145	—	—	—	—
N11	0,013	225	0,0055	195	—	—	—	—
S1	0,0065	50	0,0028	20	—	—	—	—
S2	0,0065	41	0,0028	15	—	—	—	—
S3	0,0060	20	0,0026	10	—	—	—	—
S11	0,0075	105	0,0032	40	—	—	—	—
S12	0,0075	80	0,0032	31	—	—	—	—
S13	0,0065	65	0,0028	24	—	—	—	—
H3	—	—	—	—	0,0017	19	0,0026	11
H5	—	—	—	—	0,0026	36	0,0040	21
H7	—	—	—	—	0,0017	19	0,0026	11
H8	—	—	—	—	0,0020	36	0,0030	21
H11	—	—	—	—	0,0026	45	0,0040	26
H12	—	—	—	—	0,0020	41	0,0030	24
H21	—	—	—	—	0,0020	36	0,0030	21
H31	—	—	—	—	—	—	—	—

SMG = Seco Material Group
f_z = mm/tooth (mm/flute)
v_c= m/min
All cutting data are start values

All feed are related to the centre of the cutter and not the periphery.

Drilling Threadmaster™ – Cutting data, threadmilling

SMG	DTM	
	f_z	v_c
K1	0,0065	175
K2	0,0060	155
K3	0,0060	130
K4	0,0060	125
K5	0,0055	75
K6	0,0060	110
K7	0,0055	95
N1	0,0085	400
N2	0,0085	255
N3	0,0085	170
N11	0,0085	225

Drilling Threadmaster™ – Cutting data, drilling

SMG	f						v_c
	Ø3.01-5.0	Ø5.01-7.0	Ø7.01-9.0	Ø9.01-11.0	Ø11.01-13.0	Ø13.01-15.0	
K1	0,12	0,15	0,18	0,19	0,22	0,24	170
K2	0,11	0,13	0,16	0,17	0,20	0,22	150
K3	0,11	0,13	0,16	0,17	0,20	0,22	125
K4	0,11	0,13	0,16	0,17	0,20	0,22	120
K5	0,095	0,12	0,14	0,16	0,18	0,20	70
K6	0,11	0,13	0,16	0,17	0,20	0,22	105
K7	0,095	0,12	0,14	0,16	0,18	0,20	90
N1	0,15	0,19	0,22	0,24	0,28	0,32	390
N2	0,15	0,19	0,22	0,24	0,28	0,32	250
N3	0,15	0,19	0,22	0,24	0,28	0,32	165
N11	0,15	0,19	0,22	0,24	0,28	0,32	220

SMG = Seco Material Group
f_z = mm/tooth (mm/flute)
f = mm/rev
v_c= m/min
All cutting data are start values

Feed are related to the centre of the cutter and not the periphery.

Thread Milling 396.18/19/20 Cutting data

SMG	CP500		F30M		H15	
	f_z	v_c	f_z	v_c	f_z	v_c
P1	0,050	390	0,050	390	—	—
P2	0,050	375	0,050	375	—	—
P3	0,048	325	0,048	325	—	—
P4	0,048	285	0,048	285	—	—
P5	0,046	275	0,046	275	—	—
P6	0,046	305	0,046	305	—	—
P7	0,046	290	0,046	290	—	—
P8	0,048	275	0,048	275	—	—
P11	0,046	280	0,046	280	—	—
P12	0,032	165	0,032	165	—	—
M1	0,050	285	0,050	285	—	—
M2	0,046	230	0,046	230	—	—
M3	0,038	175	0,038	175	—	—
M4	0,032	130	0,032	130	—	—
M5	0,032	110	0,032	110	—	—
K1	0,050	300	0,050	300	0,040	270
K2	0,046	260	0,046	260	0,036	235
K3	0,046	220	0,046	220	0,036	200
K4	0,046	210	0,046	210	0,036	190
K5	0,042	125	0,042	125	0,034	115
K6	0,046	185	0,046	185	0,036	170
K7	0,042	160	0,042	160	0,034	145
N1	0,065	1375	0,065	1375	0,050	1375
N2	0,065	890	0,065	890	0,050	890
N3	0,065	590	0,065	590	0,050	590
N11	0,065	780	0,065	780	—	—

SMG = Seco Material Group
f_z = mm/tooth (mm/flute)
v_c= m/min (for holder types -065AM, -079AM and -080AM use factor 0,75 on vc)
All cutting data are start values

All feed are related to the centre of the cutter and not the periphery.

Feed related to the centre of the cutter

When calculating feed and feed/tooth from average chip thickness using circular interpolation or helical interpolation ramping in an operation, the feed and feed/tooth are always related to the centre and not to the periphery of the cutter.

Tolerance on the machined component.

The tolerance on the thread diameter is 6H when using a cutter with more than one tooth. With a single cutting insert the tolerance is 4H.
If a multi-tooth milling cutter is used with one cutting insert, the other insert seat(s) must be equipped with non-cutting blank insert(s) to stabilise the milling cutter during the cutting process.

As all 396.19 inserts are double sided, it is important that all inserts are mounted in the same position to achieve best possible tolerance. It must be done by indexing the identification dots in the same position. See opposite figure.

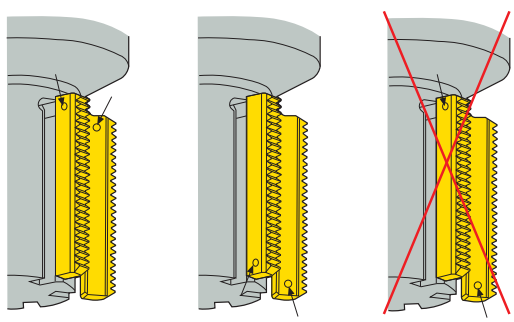

Cutting speed Thread milling 335.14

SMG	R335.14_THREAD	
	f_z	v_c
P1	0,070	275
P2	0,070	270
P3	0,070	230
P4	0,065	205
P5	0,065	195
P6	0,065	220
P7	0,065	205
P8	0,070	195
P11	0,065	200
P12	0,044	120
M1	0,070	215
M2	0,065	175
M3	0,055	130
M4	0,046	100
M5	0,046	85
K1	0,070	210
K2	0,065	185
K3	0,065	155
K4	0,065	150
K5	0,060	90
K6	0,065	130
K7	0,060	115
N1	0,090	970
N2	0,090	620
N3	0,090	415
N11	0,090	475
S1	0,046	50
S2	0,046	41
S3	0,042	35
S11	0,055	65
S12	0,055	50
S13	0,046	39
H5	0,044	43
H8	0,034	45
H11	0,044	60
H12	0,034	55
H21	0,034	45

SMG = Seco material group
f_z = mm/tooth (mm/flute)
v_c= m/min
All cutting data are start values

Threadmaster™ – Code key

DTM = Drilling Threadmaster™
TM = Threadmaster™ (2 x D)

Pitch

Shank dia

Additional info

TM - M10 x 1.5 ISO — 10 R1 — 900

Thread diameter (tdz) min

Thread form

Hand/shank style
R1 = Cylindrical

R396.18/19/20 – Code key

Cutter

Cutter dia

Insert size

Long reach

Upgraded design

R396.19 - 25 22 . 3S - 4003 - 3 - 065 A M

Shaft dia

Seco-Weldon

No. of inserts

Through coolant

Insert 396.19/20 – Code key

Insert type

Insert size

E=External
N=Internal
X=Ext. and Int.

Thread form

R 396.19 - 4003.0 E - 1.0 ISO

Hand of tool used on taper thread

Pitch

Disc Milling cutter 335.14

2 types of shanks available: cylindrical available both in steel and carbide, or ER collet chuck system

Code key Threading insert

Righ hand		System			N = Internal thread (E = external, X = internal/external)		Pitch size (2,50-5,00 mm or ex. only a fixed pitch 2,5 mm, 16 tpi...)		No. of teeth
R	335 .	14 -	217	M	N	P	250500 -	12	Z3
	Disc Milling code		Head diameter example: 21.7 mm	Thread type (W and UN)		Partial profile (F = full profile)		Connection size	

Code key cylindrical shank

	System		Connection size (insert/shank) Example: 9 mm		Access length including insert		-E for carbide shank otherwise steel shank
335 .	14 -	16	9 .	0 -	45 -	110 -	E
Disc Milling code		Shank diameter dmm		.0 cylindrical connection type		Overall length including insert	

Code key collet chuck

	System		Connection size (insert / shank) Example: 12 mm	
335 .	14 -	ER25 -	12 -	30
Disc Milling code		ER Collet chuck size		Access length including insert

Application overview, milling cutters – Solid carbide

Threadmaster™

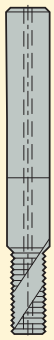

TM - Thread size M1-M20

Solid carbide thread milling cutters

Page(s) 151 - 154

Application overview, milling cutters – Cutter with inserts

396.18

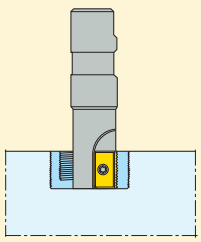

Ø 12 mm (396.18)

Thread milling cutters with index-able inserts

Page(s) 155

396.19

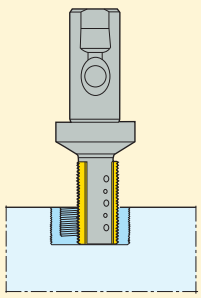

Ø 17-58 mm (396.19)

Thread milling cutters with index-able inserts

Page(s) 155-156

396.20

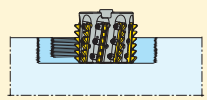

Ø 63 mm (396.20)

Thread milling cutters with index-able inserts

Page(s) 157

Application overview, milling cutters - Cutter with changeable head

335.14

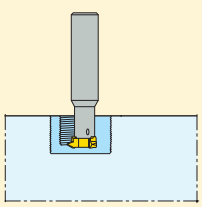

Ø11,7-27,7 mm

Thread milling cutters with change-able head

Page(s) 163-164

Threadmaster™

Solid carbide thread milling cutters

- For cutting data see page(s) 144
- TM; 2 x D
- Chamfer angle STA = 45°

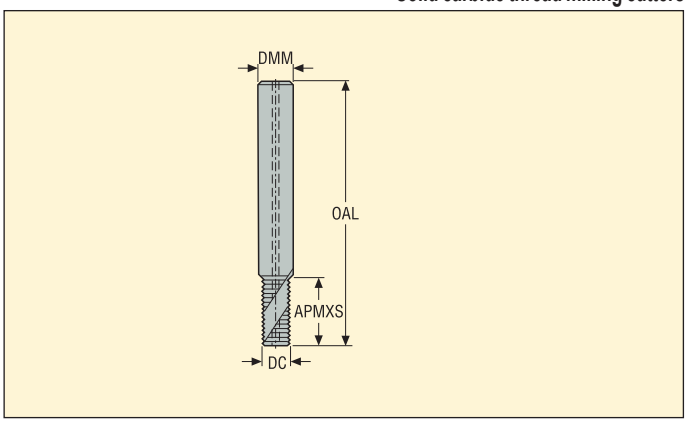

Thread profile	Designation	TDZ	Through coolant	Pitch		Dimensions in mm				NOF
				TPX	TPIX	DC	DMM	OAL	APMXS	
Metric coarse										
For internal threading	**TM-M4X0.7ISO-6R1**	M4		0,7	–	3,15	6,0	49,0	8,0	3
	TM-M4X0.7ISO-6R1-900	M4		0,7	–	3,15	6,0	49,0	8,0	3
	TM-M4X0.7ISO-6R1-H	M4		0,7	–	3,15	6,0	46,0	6,3	4
	TM-M5X0.8ISO-6R1	M5		0,8	–	3,95	6,0	49,0	10,0	3
	TM-M5X0.8ISO-6R1-900	M5		0,8	–	3,95	6,0	49,0	10,0	3
	TM-M5X0.8ISO-6R1-H	M5		0,8	–	3,95	6,0	47,0	7,2	4
	TM-M6X1.0ISO-6R1	M6		1,0	–	4,7	6,0	55,0	12,5	3
	TM-M6X1.0ISO-6R1-900	M6		1,0	–	4,7	6,0	55,0	12,5	3
	TM-M6X1.0ISO-6R1-H	M6		1,0	–	4,7	6,0	52,0	8,5	4
	TM-M8X1.25ISO-8R1	M8	■	1,25	–	6,2	8,0	62,0	16,9	3
	TM-M8X1.25ISO-8R1-900	M8	■	1,25	–	6,2	8,0	62,0	16,9	3
	TM-M8X1.25ISO-8R1-H	M8		1,25	–	6,2	8,0	57,0	12,5	4
	TM-M10X1.5ISO-10R1	M10	■	1,5	–	7,8	10,0	74,0	20,3	3
	TM-M10X1.5ISO-10R1-900	M10	■	1,5	–	7,8	10,0	74,0	20,3	3
	TM-M10X1.5ISO-10R1-H	M10		1,5	–	7,8	10,0	66,0	15,0	5
	TM-M12X1.75ISO-12R1	M12	■	1,75	–	9,4	12,0	79,0	25,4	3
	TM-M12X1.75ISO-12R1-900	M12	■	1,75	–	9,4	12,0	79,0	25,4	3
	TM-M12X1.75ISO-12R1-H	M12		1,75	–	9,4	12,0	76,0	17,5	5
	TM-M14X2.0ISO-14R1	M14	■	2,0	–	10,9	14,0	89,0	29,0	4
	TM-M14X2.0ISO-14R1-900	M14	■	2,0	–	10,9	14,0	89,0	29,0	4
	TM-M20X2.5ISO-20R1	M20	■	2,5	–	15,83	20,0	108,0	40,0	4
Metric fine										
For internal threading	**TM-MF4X0.5ISO-6R1**	M4		0,5	–	3,15	6,0	49,0	8,3	3
	TM-MF5X0.5ISO-6R1	M5		0,5	–	3,95	6,0	49,0	10,3	3
	TM-MF6X0.75ISO-6R1	M6		0,75	–	4,7	6,0	55,0	12,4	3
	TM-MF10X1.0ISO-10R1	M10	■	1,0	–	7,8	10,0	74,0	20,5	3
	TM-MF12X1.5ISO-12R1	M12	■	1,5	–	9,4	12,0	79,0	24,8	3
	TM-MF12X1.5ISO-12R1-900	M12	■	1,5	–	9,4	12,0	79,0	24,8	3
	TM-MF12X1.5ISO-12R1-H	M12		1,5	–	9,4	12,0	76,0	17,9	5
	TM-MF14X1.5ISO-14R1-H	M14		1,5	–	10,92	14,0	82,0	21,4	5
	TM-MF16X1.5ISO-16R1-H	M16		1,5	–	12,82	16,0	94,0	23,9	5
UNC										
For internal threading	**TM-NR.10X24UNC-6R1**	No.10		–	24,0	3,7	6,0	49,0	10,1	3
	TM-1/4X20UNC-6R1	1/4		–	20,0	4,7	6,0	55,0	14,6	3
	TM-5/16X18UNC-8R1	5/16	■	–	18,0	6,2	8,0	62,0	16,2	3
	TM-3/8X16UNC-10R1	3/8	■	–	16,0	7,35	10,0	74,0	19,8	3
	TM-7/16X14UNC-12R1	7/16	■	–	14,0	8,55	12,0	79,0	22,7	3
	TM-1/2X13UNC-12R1	1/2	■	–	13,0	9,4	12,0	79,0	26,4	3
	TM-9/16X12UNC-14R1	9/16	■	–	12,0	10,9	14,0	89,0	30,7	4

Please check availability in current price and stock-list.

Threadmaster™

Solid carbide thread milling cutters

- For cutting data see page(s) 144
- TM; 2 x D
- Chamfer angle STA = 45°

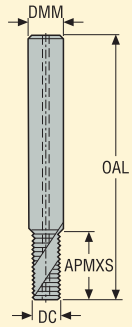

Thread profile	Designation	TDZ	Through coolant	Pitch		Dimensions in mm				NOF
				TPX	TPIX	DC	DMM	OAL	APMXS	
UNF										
	TM-NR.10X32UNF-6R1	No.10		–	32,0	3,95	6,0	49,0	9,9	3
For internal threading	**TM-1/4X28UNF-6R1**	1/4		–	28,0	4,7	6,0	55,0	14,1	3
	TM-5/16X24UNF-8R1	5/16	■	–	24,0	6,2	8,0	62,0	16,4	3
	TM-3/8X24UNF-10R1	3/8	■	–	24,0	7,8	10,0	74,0	19,6	3
	TM-7/16X20UNF-12R1	7/16	■	–	20,0	9,32	12,0	79,0	22,2	3
	TM-1/2X20UNF-12R1	1/2	■	–	20,0	9,4	12,0	79,0	26,0	3
	TM-9/16X18UNF-14R1	9/16	■	–	18,0	10,9	14,0	89,0	28,9	4
NPT										
	TM-1/8X27NPT-12R1	1/8	■	–	27,0	7,8	12,0	70,0	8,9	3
For internal and	**TM-1/4X18NPT-16R1**	1/4	■	–	18,0	10,05	16,0	81,0	13,4	4
external threading	**TM-3/8X18NPT-18R1**	3/8	■	–	18,0	13,45	18,0	81,0	13,4	4
NPTF										
	TM-1/8X27NPTF-12R1	1/8	■	–	27,0	7,7	12,0	70,0	8,9	3
For internal and	**TM-1/4X18NPTF-16R1**	1/4	■	–	18,0	10,0	16,0	81,0	13,4	4
external threading	**TM-3/8X18NPTF-18R1**	3/8	■	–	18,0	13,4	18,0	81,0	13,4	4
BSP										
	TM-1/8X28W-10R1	1/8	■	–	28,0	7,8	10,0	74,0	20,4	3
For internal and	**TM-1/4X19W-14R1**	1/4	■	–	19,0	10,9	14,0	89,0	27,4	4
external threading	**TM-3/8X19W-18R1**	3/8	■	–	19,0	13,9	18,0	102,0	35,4	4

Please check availability in current price and stock-list.

Threadmaster™ – TM-Mini

Solid carbide thread milling cutters

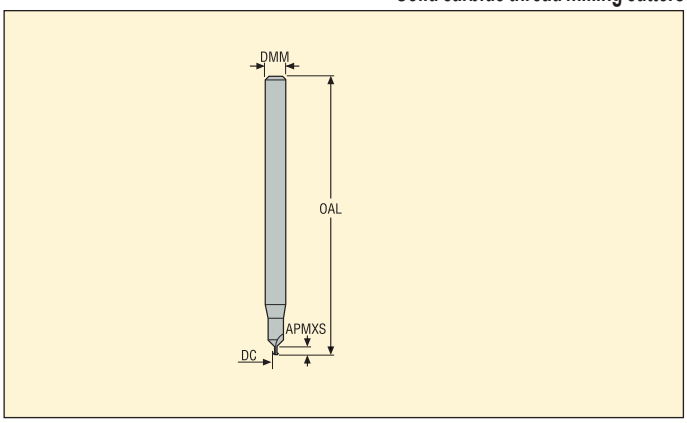

- Left-hand cutter
- For cutting data see page(s) 144
- TM ; 1.5 x D
- Chamfer angle STA = 45°

Thread profile	Designation	TDZ	Through coolant	Pitch		Dimensions in mm				NOF
				TPX	TPI	DC	DMM	OAL	APMXS	
Metric coarse				–						
	TM-M1.0X0.25ISO-3R1-H	M1.0		0,25	–	0,7	3,0	40,0	2,05	2
For internal threading	TM-M1.4X0.30ISO-3R1-H	M1.4		0,3	–	0,97	3,0	40,0	2,63	2
	TM-M1.6X0.35ISO-3R1-H	M1.6		0,35	–	1,15	3,0	40,0	3,07	2
	TM-M2.0X0.40ISO-3R1-H	M2.0		0,4	–	1,56	3,0	40,0	3,74	2
	TM-M2.2X0.45ISO-3R1-H	M2.2		0,45	–	1,71	3,0	40,0	3,9	2
	TM-M2.5X0.45ISO-3R1-H	M2.5		0,45	–	2,01	3,0	40,0	4,45	3

Please check availability in current price and stock-list.

Drilling Threadmaster™

Solid carbide thread milling cutters

- For cutting data see page(s) 145
- DTM; 2 x D
- Chamfer angle STA = 45°
- Drill Point SIG = 140°

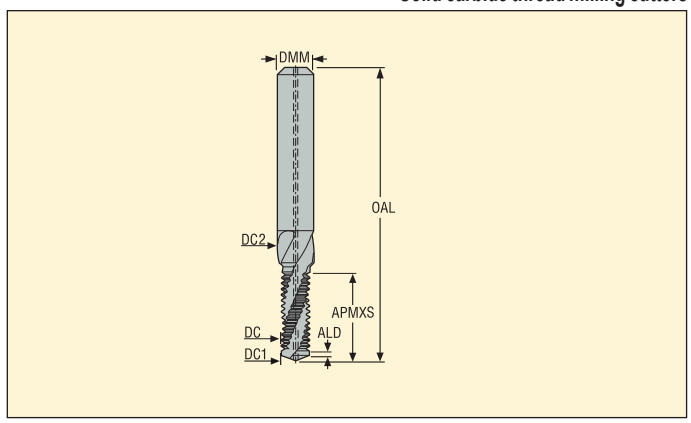

Thread profile	Designation	TDZ	Through coolant	Pitch TPX	Pitch TPIX	Dimensions in mm ALD	DC	DC1	DC2	DMM	OAL	APMXS	NOF
Metric coarse													
	DTM-M4X0.7ISO-6R1	M4	■	0,7	–	0,7	3,24	3,3	4,3	6,0	49,0	9,42	2
	DTM-M5X0.8ISO-6R1	M5	■	0,8	–	0,8	4,1	4,2	5,3	6,0	55,0	11,65	2
	DTM-M6X1.0ISO-8R1	M6	■	1,0	–	1,0	4,85	5,0	6,3	8,0	62,0	14,49	2
	DTM-M8X1.25ISO-10R1	M8	■	1,25	–	1,2	6,45	6,75	8,3	10,0	74,0	18,17	2
	DTM-M10X1.5ISO-12R1	M10	■	1,5	–	1,5	8,08	8,5	10,3	12,0	79,0	23,37	2
	DTM-M12X1.75ISO-14R1	M12	■	1,75	–	1,5	9,74	10,25	12,3	14,0	89,0	27,06	2
	DTM-M14X2.0ISO-16R1	M14	■	2,0	–	1,5	11,36	12,0	14,3	16,0	102,0	32,77	2
	DTM-M16X2.0ISO-18R1	M16	■	2,0	–	1,5	13,28	14,0	16,3	18,0	102,0	37,12	2
Metric fine													
	DTM-MF8X1.0ISO-10R1	M8	■	1,0	–	1,0	6,79	7,0	8,3	10,0	74,0	18,8	2
	DTM-MF10X1.0ISO-12R1	M10	■	1,0	–	1,5	8,75	9,0	10,3	12,0	79,0	23,18	2
	DTM-MF12X1.5ISO-14R1	M12	■	1,5	–	1,5	10,06	10,5	12,3	14,0	89,0	28,19	2
UNC													
	DTM-1/4X20UNC-8R1	1/4	■	–	20,0	1,2	4,7	5,08	6,65	8,0	62,0	15,71	2
	DTM-5/16X18UNC-10R1	5/16	■	–	18,0	1,4	6,01	6,53	8,24	10,0	74,0	19,0	2
	DTM-3/8X16UNC-12R1	3/8	■	–	16,0	1,5	7,36	7,94	9,83	12,0	79,0	22,97	2
	DTM-1/2X13UNC-14R1	1/2	■	–	13,0	1,5	9,87	10,75	13,0	14,0	89,0	30,07	2
UNF													
	DTM-1/4X28UNF-8R1	1/4	■	–	28,0	0,9	5,17	5,44	6,65	8,0	62,0	15,16	2
	DTM-5/16X24UNF-10R1	5/16	■	–	24,0	1,1	6,51	6,88	8,24	10,0	74,0	18,83	2
	DTM-3/8X24UNF-12R1	3/8	■	–	24,0	1,1	8,07	8,47	9,83	12,0	79,0	21,2	2
	DTM-1/2X20UNF-14R1	1/2	■	–	20,0	1,3	10,88	11,43	13,0	14,0	89,0	28,19	2
BSP													
	DTM-1/8X28W-12R1	1/8	■	–	28,0	0,9	8,4	8,71	10,03	12,0	79,0	22,03	2
	DTM-1/4X19W-16R1	1/4	■	–	19,0	1,3	11,44	11,67	13,46	16,0	102,0	29,45	2

Please check availability in current price and stock-list.

R396.18/R396.19

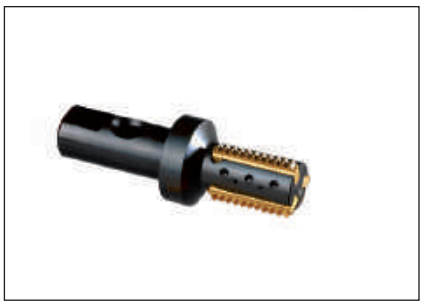

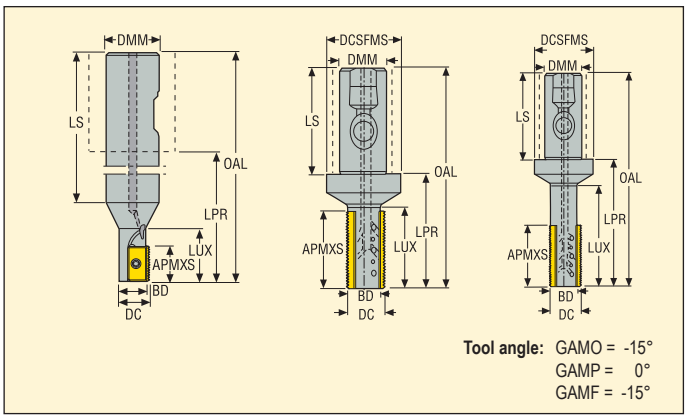

- For cutting data see page(s) 146
- For insert information see page(s) 159-161
- Min thread diameter, see page(s) 158

Designation	Dimensions in mm										KG		Type of mounting	Insert
	DC	BD	DMM	DCS-FMS	OAL	LPR	LUX	LS	AP-MXS					
R396.18-2012.3-13A	12,0	10,0	20,0	–	105,0	38,0	20,0	67,0	13,0	1	0,2	30000	Weldon	13.MS
R396.19-2517.3S-4003-2AM	17,0	13,0	25,0	40,0	116,0	60,0	26,0	56,0	25,0	2	0,5	22400	Seco-Weldon	396.19-4003
R396.19-2522.3S-4003-3AM	22,0	17,6	25,0	40,0	116,0	60,0	43,0	56,0	40,0	3	0,4	20000	Seco-Weldon	396.19-4003
R396.19-2522.3S-4003-3-065AM	22,0	17,6	25,0	40,0	140,0	84,0	65,0	56,0	40,0	3	0,5	20000	Seco-Weldon	396.19-4003
R396.19-2525.3S-4005-2AM	25,0	19,0	25,0	40,0	116,0	60,0	43,0	56,0	40,0	2	0,4	13600	Seco-Weldon	396.19-4005
R396.19-2530.3S-4005-3AM	30,0	23,0	25,0	40,0	116,0	60,0	43,0	56,0	40,0	3	0,5	12000	Seco-Weldon	396.19-4005
R396.19-2530.3S-4005-3-080AM	30,0	22,2	25,0	40,0	154,0	98,0	80,0	56,0	40,0	3	0,6	12000	Seco-Weldon	396.19-4005
R396.19-3232.3S-4003-6AM	32,0	27,4	32,0	50,0	120,0	60,0	43,0	60,0	40,0	6	0,7	16800	Seco-Weldon	396.19-4003
R396.19-3232.3S-4003-3-079AM	32,0	27,4	32,0	50,0	156,0	96,0	79,57	60,0	40,0	3	0,9	20000	Seco-Weldon	396.19-4003
R396.19-3232.3S-4005-3-079AM	32,0	24,2	32,0	50,0	156,0	96,0	79,0	60,0	40,0	3	0,9	11200	Seco-Weldon	396.19-4005
R396.19-3236.3S-4005-6AM	36,0	28,2	32,0	50,0	120,0	60,0	42,0	60,0	40,0	6	0,7	11200	Seco-Weldon	396.19-4005

Min thread diameter, see page(s) 158

Note! R396.19-2525.3S-4005-2AM Max pitch sze 4,5 ISO/6 TPI can be used.

Spare Parts, Parts included in delivery

For holder	Insert screw	Insert key	Fastening screw
R396.18	C02506-T07P	–	–
R396.19	–	T09P-2	P6SS4X4-T09P

Please check availability in current price and stock-list

Note! When milling threads to smaller diameters than indicated for a certain pitch/cutter combination, an incorrect thread form will result.

*Torque key T00-07P09, T00-09P20.

R396.19

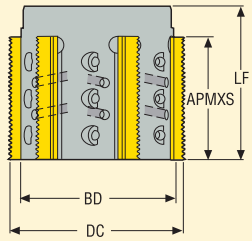

Tool angle: GAMO = -15°
GAMP = 0°
GAMF = -15°

- For cutting data see page(s) 146
- For insert information see page(s) 159-161
- Min thread diameter, see page(s) 158

Designation	Dimensions in mm					KG		Insert
	DC	BD	LF	APMXS				
R396.19-0058-4003-6AM	58,0	53,0	50,0	40,0	6	0,7	8600	396.19-4003
R396.19-0058-4005-6AM	58,0	50,0	50,0	40,0	6	0,6	8600	396.19-4005

Min thread diameter, see page(s) 158

Spare Parts, Parts included in delivery

For holder	Insert key	Fastening screw	Arbor screw
...6AM	T09P-2	P6SS4X4-T09P	MC6S12X40

Please check availability in current price and stock-list
***Torque values 2 Nm**. Torque key, T00-09P20.

R396.20

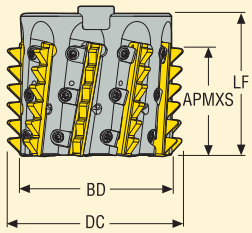

- For cutting data see page(s) 146
- For insert information see page(s) 162
- Min thread diameter, see page(s) 158

Tool angle: GAMO = -15°
GAMP = -15°
GAMF = -15°

Designation	Dimensions in mm					KG		Insert
	DC	BD	LF	APMXS				
R396.20-02.478-4005-9AW	63,0	53,5	50,0	40,0	9	0,6	8600	396.20-4005

Min thread diameter, see page(s) 158

Spare Parts, Parts included in delivery

For holder	Wedge screw	Wedge clamp	Key (T-handle)	Key	Arbor screw
R396.20	LD4012-T08P	CW0405M	DOUBLE-T	H4B-T08P	UC6S1/2UNFX1-1/2

Please check availability in current price and stock-list
***Torque values 2 Nm**. Torque key, T00-09P20.

R396.18/R396.19/R396.20

Min thread diameter (major dia), for different pitch and cutter combinations

For cutter	Pitch mm / TPI										
	1 24	1,5 16	2 12	2,5 10	3 8	3,5 7	4 6	4,5	5 5	5,5	6 4
R396.18-2012.3-13A	14	15	16	–	–	–	–	–	–	–	–
R396.19-2517.3S-4003-2AM	19	20	21	22	24	–	–	–	–	–	–
R396.19-2522.3S-4003-3AM	24	25	26	27	27	–	–	–	–	–	–
R396.19-2522.3S-4003-3-065AM	24	25	26	27	27	–	–	–	–	–	–
R396.19-3232.3S-4003-6AM	34	35	36	39	40	–	–	–	–	–	–
R396.19-2525.3S-4005-2AM	–	–	–	–	30	33	35	37	–	–	–
R396.19-2530.3S-4005-3AM	–	–	–	–	38	40	42	44	45	47	48
R396.19-2530.3S-4005-3-080AM	–	–	–	–	38	40	42	44	45	47	48
R396.19-3236.3S-4005-6AM	–	–	–	–	43	45	47	47	48	50	53
R396.19-0058-4003-6AM	62	63	65	66	67	–	–	–	–	–	–
R396.19-0058-4005-6AM	–	–	–	–	67	69	70	71	72	73	74
R396.19-3232.3S-4003-3-079AM	34	35	36	39	40	–	–	–	–	–	–
R396.19-3232.3S-4005-3-079AM	–	–	–	–	39	41	43	45	46	48	49
R396.20-02.478-4005-9AW	–	–	–	–	80	–	84	–	–	–	89

Note! When milling threads to smaller diameters than indicated for a certain pitch/cutter combination, an incorrect thread form will result.

Dimensions of mounting

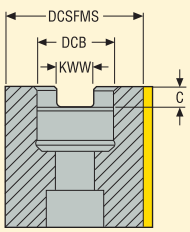

For cutter	Dimensions in mm				
	DCB	DCSFMS	KWW	C	For arbor
R396.19-0058-4005-6AM	27,0	50,0	12,4	7,0	27
R396.19-0058-4003-6AM	27,0	53,0	12,4	7,0	27
R396.20-02.478-4005-9AW	25,4	53,5	9,7	5,7	25,4

13NMS/XMS

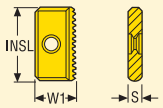

Tolerances:
INSL = ± 0,012 mm
HC = ± 0,012 mm
S = ± 0,025 mm

Size	Dimensions in mm INSL	S
13	13,0	2,5

13NMS/XMS

Inserts	Designation	Grades CP500				
For internal threading						
	13NMS1.0ISO	■				
	13NMS1.5ISO	■				
	13NMS2.0ISO	■				
	13NMS24UN	■				
	13NMS20UN	■				
	13NMS16UN	■				
For external and internal threading						
	13XMS19W	■				
	13XMS14W	■				

■ Stock standard
Subject to change refer to current price- and stock-list.

396.19-4003

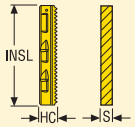

Tolerances:
INSL = ± 0,007 mm
HC = ± 0,012 mm
S = ± 0,05 mm

Size	Dimensions in mm INSL	S
4003	40,0	3,5

396.19-4003

Inserts	Designation	Grades F30M	H15			
For external threading	396.19-4003.0E1.0ISO	■				
	396.19-4003.0E1.5ISO	■				
	396.19-4003.0E2.0ISO	■				
	396.19-4003.0E18UN	■				
	396.19-4003.0E16UN	■				
	396.19-4003.0E14UN	■				
	396.19-4003.0E12UN	■				
For internal threading	396.19-4003.0N1.0ISO	■	■			
	396.19-4003.0N1.5ISO	■	■			
	396.19-4003.0N2.0ISO	■	■			
	396.19-4003.0N2.5ISO	■				
	396.19-4003.0N3.0ISO	■				
	396.19-4003.0N20UN	■				
	396.19-4003.0N18UN	■				
	396.19-4003.0N16UN	■	■			
	396.19-4003.0N14UN	■	■			
	396.19-4003.0N12UN	■	■			
	396.19-4003.0N10UN	■				
	396.19-4003.0N9UN	■				
	396.19-4003.0N8UN	■				
For external and internal threading	396.19-4003.0X16W	■				
	396.19-4003.0X14W	■				
	396.19-4003.0X12W	■				
	396.19-4003.0X11W	■				

■ Stock standard
Subject to change refer to current price- and stock-list.

396.19-4003/4005

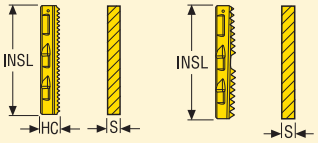

Tolerances: 4003...
INSL = ± 0,007 mm
HC = ± 0,012 mm
S = ± 0,05 mm

Tolerances: 4005...
INSL = ± 0,015 mm
HC = ± 0,012 mm
S = ± 0,05 mm

Size	Dimensions in mm INSL	S
4003	40,0	3,5
4005	40,0	4,85

396.19-4003/4005 - R396.19-4003/4005

Inserts	Designation	Grades F30M	H15			
For internal threading						
	396.19-4005.0N3.5ISO	■				
	396.19-4005.0N4.0ISO	■				
	396.19-4005.0N4.5ISO	■				
	396.19-4005.0N5.0ISO	■				
	396.19-4005.0N5.5ISO	■				
	396.19-4005.0N6.0ISO	■				
	396.19-4005.0N7UN	■				
	396.19-4005.0N6UN	■				
	396.19-4005.0N5UN	■				
	396.19-4005.0N4.5UN	■				
	396.19-4005.0N4UN	■				
For external and internal threading						
	396.19-4005.0X8W	■				
	R396.19-4003.0X14NPT	■				
	R396.19-4003.0X11.5NPT	■				
	R396.19-4005.0X8NPT	■				
	R396.19-4003.0X14NPTF	■				
	R396.19-4003.0X11.5NPTF	■				
	R396.19-4003.0X14BSPT	■				
	R396.19-4003.0X11BSPT	■				
Non cutting blank						
	396.19-4003XX		■			
	396.19-4005XX		■			

■ Stock standard
Subject to change refer to current price- and stock-list.

396.20-4005

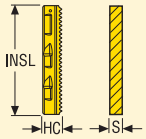

Tolerances:
INSL = ± 0,007 mm
HC = ± 0,012 mm
S = ± 0,05 mm

Size	Dimensions in mm INSL	S
4005..ACME	40,0	4,90
4005..BUT	40,0	4,85

396.20

Inserts	Designation	Grades F30M				
For internal threading	396.20-4005.0N3ACME	■				
	396.20-4005.0N4ACME	■				
	396.20-4005.0N8ACME	■				
	396.20-4005.0N4BUT	■				

■ Stock standard
Subject to change refer to current price- and stock-list.

335.14 Shank - Cylindrical version

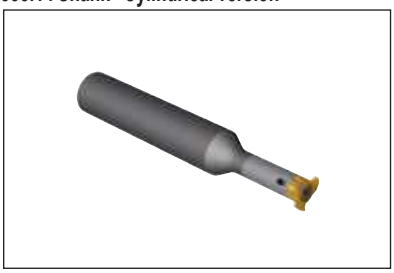

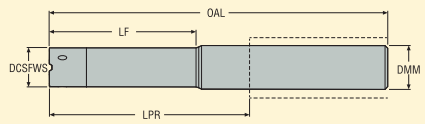

Max RPM = 30 000 rev/min

- Cutting data, see page(s) 147
- Technical information, see page 143
- -E = Carbide shank with DMM tolerance = h6
- Steel shank: DMM tolerance = g6

Designation	Dimensions in mm						KG	Insert
	DCSFWS	DMM	LF	OAL	LPR			
335.14-1006.0-015-060	6,0	10,0	11,5	56,5	16,5	–	0,1	R335.14...06Z..
335.14-1206.0-021-080-E	6,0	12,0	17,5	76,5	31,5	✓	0,1	R335.14...06Z..
335.14-1206.0-030-090-E	6,0	12,0	26,5	86,5	41,5	✓	0,1	R335.14...06Z..
335.14-1206.0-042-100-E	6,0	12,0	38,5	96,5	51,5	✓	0,1	R335.14...06Z..
335.14-1008.0-017-060	8,0	10,0	12,5	55,5	15,5	–	0,1	R335.14...08Z..
335.14-1208.0-029-095-E	8,0	12,0	24,5	90,5	45,5	✓	0,2	R335.14...08Z..
335.14-1208.0-042-110-E	8,0	12,0	37,5	105,5	60,5	✓	0,2	R335.14...08Z..
335.14-1208.0-056-120-E	8,0	12,0	51,5	115,5	70,5	✓	0,2	R335.14...08Z..
335.14-1609.0-018-080	9,0	16,0	12,2	74,2	26,2	✓	0,1	R335.14...09Z..
335.14-1609.0-032-100-E	9,0	16,0	26,2	94,2	46,2	✓	0,2	R335.14...09Z..
335.14-1609.0-045-110-E	9,0	16,0	39,2	104,2	56,2	✓	0,2	R335.14...09Z..
335.14-1609.0-064-130-E	9,0	16,0	58,2	124,2	76,2	✓	0,3	R335.14...09Z..
335.14-1612.0-024-080	12,0	16,0	18,3	74,3	26,3	✓	0,1	R335.14...12Z..
335.14-1612.0-042-100-E	12,0	16,0	36,3	94,3	46,3	✓	0,2	R335.14...12Z..
335.14-1612.0-060-130-E	12,0	16,0	54,3	124,3	76,3	✓	0,3	R335.14...12Z..
335.14-1612.0-085-160-E	12,0	16,0	76,3	154,3	106,3	✓	0,3	R335.14...12Z..
335.14-1614.0-042-100-E	14,3	16,0	35,5	93,5	45,5	✓	0,3	R335.14...14Z..
335.14-1614.0-060-130-E	14,3	16,0	53,5	123,5	75,5	✓	0,3	R335.14...14Z..
335.14-1614.0-085-160-E	14,3	16,0	78,5	153,5	105,5	✓	0,4	R335.14...14Z..
335.14-2014.0-036-100	14,0	20,0	29,2	93,5	43,5	✓	0,2	R335.14...14Z..

Spare Parts, included in delivery

For cutter	Key (T-handle)	Insert screw	Insert key
335.14-..06	DOUBLE-T	C92608-T08P	H4B-T08P
335.14-..08	DOUBLE-T	C93510-T10P	H4B-T10P
335.14-..09	DOUBLE-T	C94012-T15P	H4B-T15P
335.14-..12/14	DOUBLE-T	C95012-T20P	H6B-T20P

Please check availability in current price and stock-list

335.14 Shank with ER collet

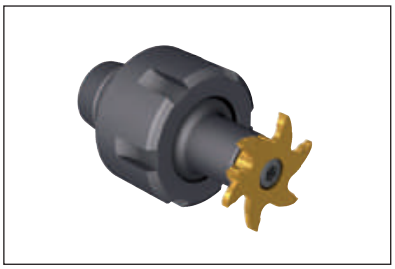

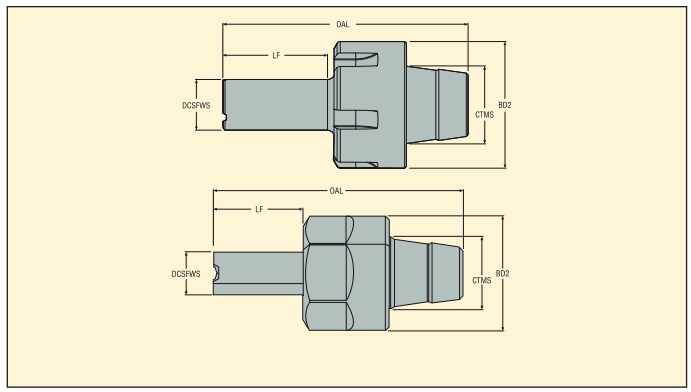

- Cutting data, see page(s) 147
- Technical information, see page 143

Designation	Dimensions in mm						KG	Insert
	DCSFWS	BD2	LF	OAL	CTMS			
335.14-ER11-06-016	6,0	16,0	12,5	34,9	ER 11	–	0,1	R335.14...06Z..
335.14-ER11-08-016	8,0	16,0	11,5	33,8	ER 11	–	0,1	R335.14...08Z..
335.14-ER16-08-022	8,0	32,0	17,5	49,6	ER 16	–	0,2	R335.14...08Z..
335.14-ER11-09-022	9,0	16,0	16,2	38,5	ER 11	–	0,1	R335.14...09Z..
335.14-ER16-09-022	9,0	32,0	16,2	48,3	ER 16	–	0,2	R335.14...09Z..
335.14-ER25-09-022	9,0	35,0	16,2	55,3	ER 25	–	0,2	R335.14...09Z..
335.14-ER16-12-030	12,0	32,0	24,3	56,4	ER 16	–	0,2	R335.14...12Z..
335.14-ER25-12-030	12,0	35,0	24,3	63,4	ER 25	–	0,2	R335.14...12Z..
335.14-ER32-12-030	12,0	50,0	24,3	69,4	ER 32	–	0,4	R335.14...12Z..
335.14-ER25-14-019	14,0	35,0	12,5	52,3	ER 25	–	0,2	R335.14...14Z..
335.14-ER25-14-035	14,0	35,0	28,5	67,6	ER 25	–	0,2	R335.14...14Z..
335.14-ER32-14-019	14,0	50,0	12,5	58,3	ER 32	–	0,4	R335.14...14Z..
335.14-ER32-14-035	14,0	50,0	28,5	73,6	ER 32	–	0,4	R335.14...14Z..

Spare Parts, included in delivery

For cutter	Key (T-handle)	Insert screw	Insert key
335.14-ER..-06	DOUBLE-T	C92608-T08P	H4B-T08P
335.14-ER..-08	DOUBLE-T	C93510-T10P	H4B-T10P
335.14-ER..-09	DOUBLE-T	C94012-T15P	H4B-T15P
335.14-ER..-12/14	DOUBLE-T	C95012-T20P	H6B-T20P

Please check availability in current price and stock-list

335.14 Insert: Thread profile Whitworth – Metric

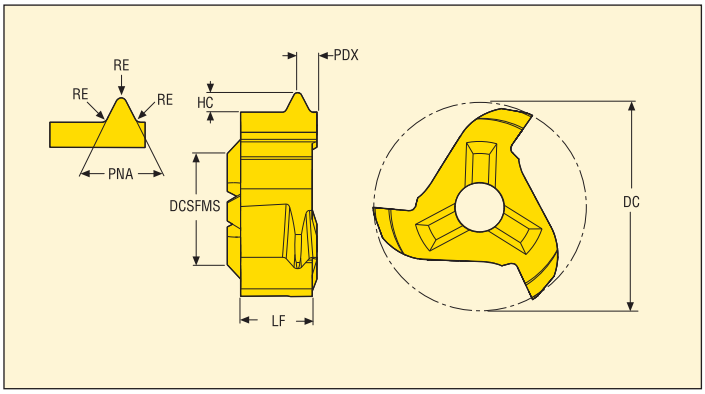

- Cutting data, see page(s) 147
- Technical information, see page 143

Designation	Pitch	Dimensions in mm								Grades	
										Coated	
	TPIX	DC	DCSFMS	HC	LF	PDX	PNA	RE	ZEFP	F32M	
R335.14-117WXF11.06Z3	11,0	11,7	6,0	1,48	3,6	1,6	55,0	0,31	3	■	
R335.14-117WXF14.06Z3	14,0	11,7	6,0	1,16	3,6	1,3	55,0	0,24	3	■	
R335.14-117WXF19.06Z3	19,0	11,7	6,0	0,86	3,6	1,1	55,0	0,18	3	■	
R335.14-157WXF14.08Z3	14,0	15,7	8,0	1,17	4,6	1,5	55,0	0,24	3	■	
R335.14-177WXF11.09Z3	11,0	17,7	9,0	1,48	5,85	1,45	55,0	0,31	3	■	
R335.14-177WXF14.09Z3	14,0	17,7	9,0	1,16	5,85	1,25	55,0	0,24	3	■	
R335.14-177WXF19.09Z3	19,0	17,7	9,0	0,856	5,85	0,95	55,0	0,18	3	■	

■ **Stock standard**
Subject to change refer to current price- and stock-list.

335.14 Insert: Thread profile Partial Metric – Metric

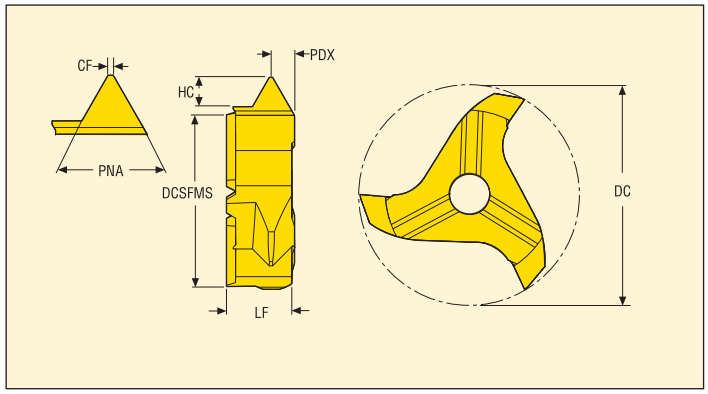

- Cutting data, see page(s) 147
- Technical information, see page 143

Designation	Pitch		Dimensions in mm							ZEFP	Grades	
											Coated	
	TPN	TPX	DC	DCSFMS	CF	HC	LF	PDX	PNA		F32M	
R335.14-117MNP100200.06Z3	1,0	2,0	11,7	6,0	0,13	1,25	3,6	0,8	60,0	3	■	
R335.14-117MNP200300.06Z3	2,0	3,0	11,7	6,0	0,25	1,78	3,6	1,2	60,0	3	■	
R335.14-157MNP150275.08Z3	1,5	2,75	15,7	8,0	0,19	1,67	4,6	1,1	60,0	3	■	
R335.14-157MNP250300.08Z3	2,5	3,0	15,7	8,0	0,31	1,78	4,6	1,2	60,0	3	■	
R335.14-177MNP100200.09Z3	1,0	2,0	17,7	9,0	0,12	1,19	5,85	1,15	60,0	3	■	
R335.14-177MNP150275.09Z3	1,5	2,75	17,7	9,0	0,19	1,62	5,85	1,25	60,0	3	■	
R335.14-177MNP200375.09Z3	2,0	3,75	17,7	9,0	0,25	2,22	5,85	1,65	60,0	3	■	
R335.14-177MNP300550.09Z3	3,0	5,5	17,7	9,0	0,38	3,25	5,85	2,25	60,0	3	■	
R335.14-217MNP100200.12Z3	1,0	2,0	21,7	12,0	0,12	1,19	5,85	1,25	60,0	3	■	
R335.14-217MNP200375.12Z3	2,0	3,75	21,7	12,0	0,25	2,22	5,85	1,65	60,0	3	■	
R335.14-217MNP250450.12Z3	2,5	4,5	21,7	12,0	0,25	2,7	5,85	2,15	60,0	3	■	
R335.14-217MNP350600.12Z3	3,5	6,0	21,7	12,0	0,44	3,84	5,85	2,65	60,0	3	■	
R335.14-277MNP250500.14Z3	2,5	5,0	27,7	14,0	0,37	2,93	6,6	2,6	60,0	3	■	
R335.14-277MNP400600.14Z3	4,0	6,0	27,7	14,0	0,5	4,6	6,6	3,0	60,0	3	■	

■ **Stock standard**
Subject to change refer to current price- and stock-list.

335.14 Insert: Thread profile UN – Metric

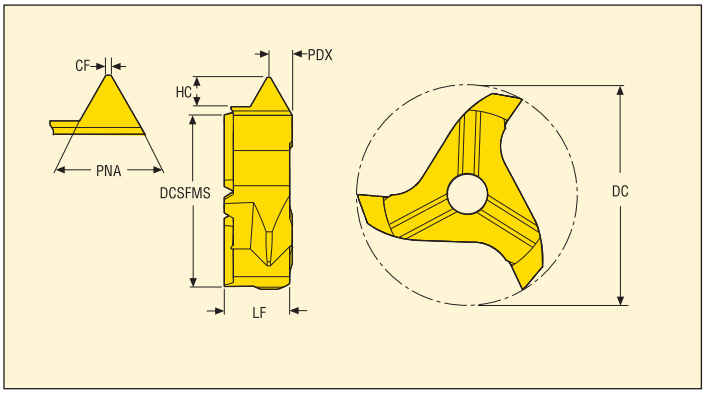

- Cutting data, see page(s) 147
- Technical information, see page 143

Designation	Pitch TPIX	Dimensions in mm DC	DCSFMS	HC	LF	PDX	PNA	CF	ZEFP	Grades Coated F32M	
R335.14-177UNNF10.09Z3	10,0	17,7	9,0	1,375	5,85	1,25	60,0	0,32	3	■	
R335.14-177UNNF11.09Z3	11,0	17,7	9,0	1,249	5,85	1,05	60,0	0,29	3	■	
R335.14-177UNNF12.09Z3	12,0	17,7	9,0	1,146	5,85	1,05	60,0	0,27	3	■	
R335.14-177UNNF14.09Z3	14,0	17,7	9,0	0,982	5,85	0,85	60,0	0,23	3	■	
R335.14-177UNNF16.09Z3	16,0	17,7	9,0	0,859	5,85	0,85	60,0	0,2	3	■	
R335.14-177UNNF18.09Z3	18,0	17,7	9,0	0,763	5,85	0,85	60,0	0,18	3	■	
R335.14-177UNNF20.09Z3	20,0	17,7	9,0	0,687	5,85	0,65	60,0	0,16	3	■	
R335.14-177UNNF24.09Z3	24,0	17,7	9,0	0,572	5,85	0,65	60,0	0,13	3	■	
R335.14-177UNNF6.09Z3	6,0	17,7	9,0	2,291	5,85	1,65	60,0	0,53	3	■	
R335.14-177UNNF8.09Z3	8,0	17,7	9,0	1,718	5,85	1,45	60,0	0,4	3	■	

■ **Stock standard**
Subject to change refer to current price- and stock-list.

Introduction to taps

What are you looking for in a thread?

Cutting a thread vs forming a thread

There are two way of making a thread, cutting or forming. Cutting is to be used in most materials, while forming is to be used in steel, stainless steel and aluminium.

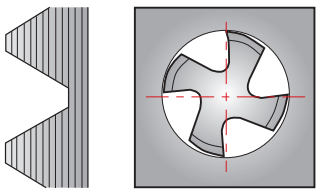

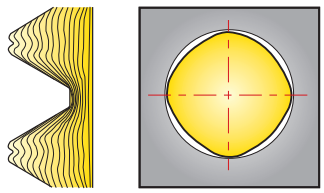

Through hole, blind hole

Taps have different designs. Depending on application (through or blind hole).

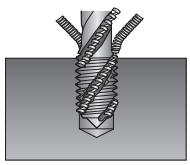

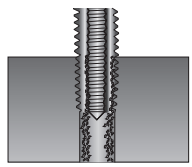

Hole size

Dimension of the hole differs between cutting and forming the thread.

Cutting tap

D=TD-PTH

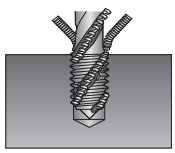

Forming tap

D=TD-PTH/2

($D=D_{nom}$ - 0.0068 x PTH x 65)

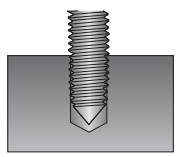

D = Hole diameter
TD = Major thread diameter
PTH = Thread pitch

Introduction to taps – Tool guide

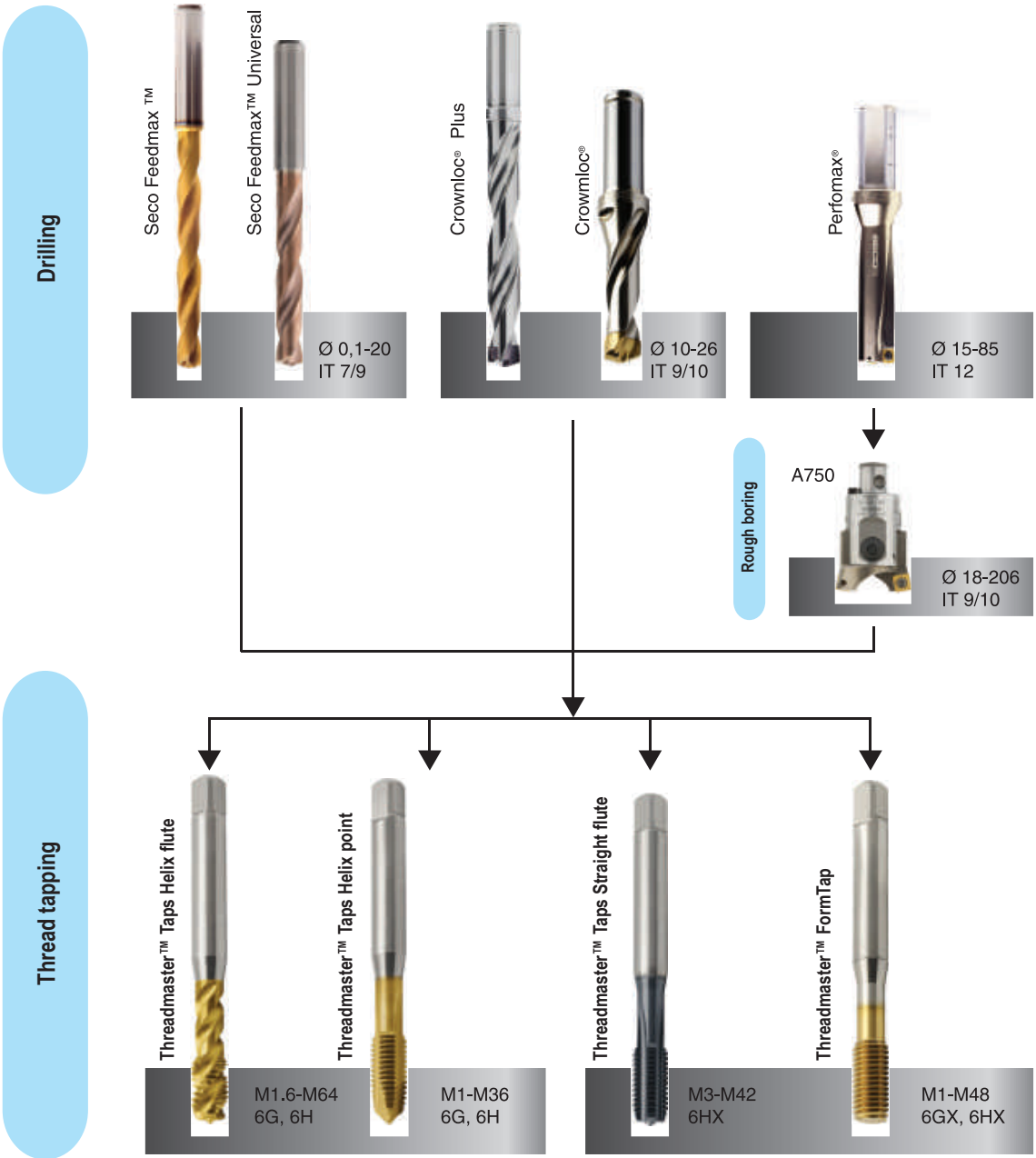

Also other threading profiles are available.

Taps – Choice of Tap tolerance

The Threadmaster™ Taps from Seco are available for threads with different tolerences 6H and 6G, as well in 6HX and 6GX.
Normal standard tolerance is H.
Tolerance GX/HX and BX is to be used when risk of oversize is limited, this also increases tool life of the tap.
Taps for UNC/UNF are designed for tolerance 2B.
Tolerance class for G and NPT/NPTF is normal.

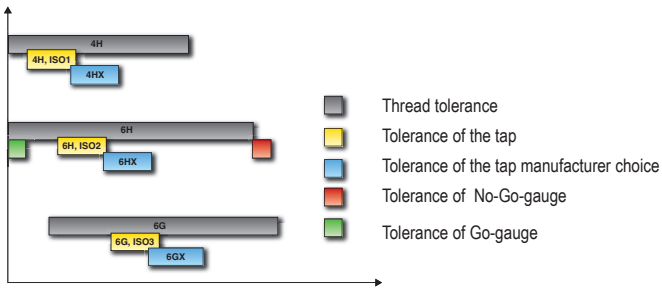

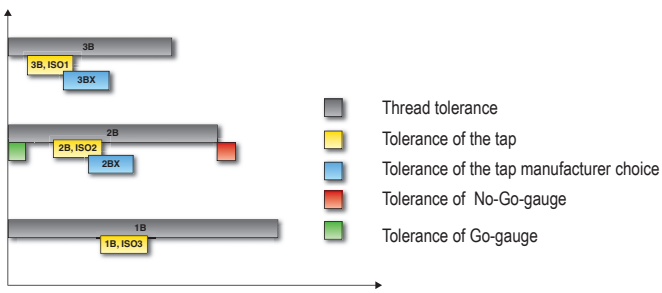

Code key – Taps

MTS	-	M10	X	1.5ISO	6H	-	B	C	-	V	0	01	-	A
1		2		3	4		5	6		7	8	9		10

No. 1

MTH MTP MTS MF

1	Description MTH = Threadmaster™ Tap Helix flute MTP = Threadmaster™ Tap Helix point MTS = Threadmaster™ Tap Straight flute tap MF = Threadmaster™ FormTap
2	Thread type and size
3	Pitch and thread form
4	Tolerance (tctr) 2BX, 5HX, 6G, 6GX, 6H , 6HX, 2B, Normal
5	Operation, B = Blind hole, T = Through hole, X = Blind and Through hole
6	Entering Chamfer(THCHT) B = Entering chamfer 3,5 - 5 threads C = Entering chamfer 2 - 3 threads E = Entering chamfer 1,5 - 2 threads
7	V = Versatile, P = Steel, M = Stainless Steel, K = Cast Iron, N = Non ferrous metals
8	Release No.= 0 (2014)
9	Tool type No. = 01, 02, 03, 04 etc
10	A = Through coolant

Taps – Entering chamfer

B-type

Length 3.5 – 5 threads
High torque
Best surface finish
Thin chip thickness
Low pressure at the chamfer
Long tool life
Most common for through holes (Helix point)

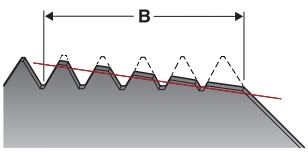

C-type

Length 2 - 3 threads
Medium torque
Good surface finish
Normal chip thickness
Normal pressure at the chamfer
Normal tool life
Most common design
Standard for blind holes
Most common for blind holes (Helix flute)

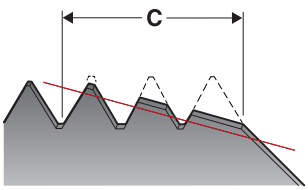

E-type

Length 1.5 – 2 threads
Low torque
Good surface finish
Thick chip thickness
High pressure at the chamfer
Shorter tool life
When limited space in the bottom of a hole

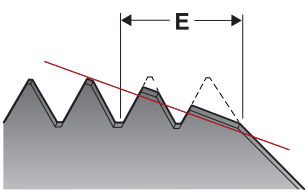

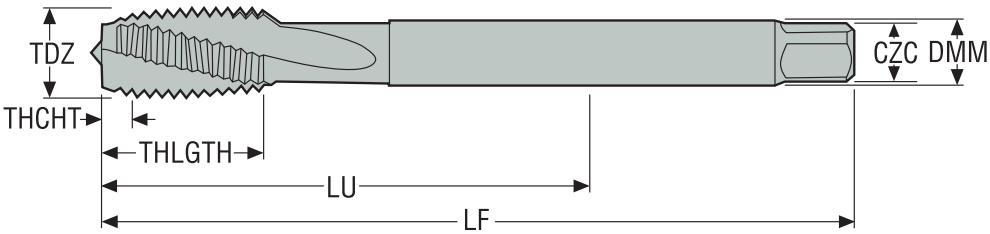

Definitions Seco Threadmaster™

BSG	= Basic standard group
CZC	= Connection size code
DMM	= Shank diameter
FHA	= Flute helix angle
LF	= Functional length
LU	= Usable length
NOF	= Number of flutes
PHDR	= Recommended premachined hole diameter
PHDX	= Maximum premachined hole diameter
TCTR	= Thread tolerance class
TD	= Thread diameter
TDZ	= Thread diameter size
THCHT	= Thread chamfer type
THFT	= Thread form type ISO, Withworth, UN...
THLGTH	= Thread length
TPIX	= Threads per inch maximum
TTP	= Thread type internal/external/both
TPX	= Thread pitch maximum
ULDR	= Usable length diameter ratio

Taps - Choice of toolholder

The tool holder choice is made according to the machine spindle, with or without synchronization:

Modern CNC machine with synchronization:

The modern CNC machines can synchronize the spindle feed rate and rotation in order to make a rigid tapping operation. The TCER – tapping chucks with micro-compensation is the most suitable for synchronized tapping.

TCER Tapping chucks with micro-compensation, for synchronized tapping:

TCER for synchronized tapping has a micro-compensation system to avoid the small discrepancies and axial forces during rigid tapping machining. The taps are mounted in specific ER collets with square drive.
Note: These ER collets with square drive can also be mounted in ER collet chucks, but then without micro-compensation

TCER

Troubleshooting

Oversized thread

Wrong tap for application
- Refer to application charts

Incorrect axial feed
- Ensure feed rate is controlled
- If possible, use tool holder for syncronized tapping

Wrong cutting speed
- Refer to recommendations

Wrong tolerance
- Choose tap with lower tolerance

Undersized thread

Tap worn out
- Replace tap

Tap drill hole too small
- Check drilling recommendations

Material closing after tapping
- Increase drill diameter

Wrong tolerance on tap
- Choose tap with higher tolerance

Chipping

Wrong tap for the application
- Check for tool selection

Incorrect or lack of lubricant
- Use appropriate emulsion or oil

Tap hitting bottom of hole
- Increase drill depth or reduce thread depth

Trapped chip
- Check tool selection

Surface hardening in drilled hole
- Check drilling recommendations

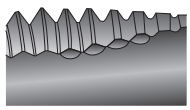

Breakage

Too high torque
- Use tap holder with torque settings

Tap worn out
- Replace tap

Incorrect or lack of lubricant
- Use appropriate emulsion or oil

Tap hitting bottom of hole
- Increase drill depth or reduce thread depth

Wrong cutting speed
- Refer to recommendations

“Birdnest” around tool
- Check tool selection

Tap drill hole too small
- Check drilling recommendations

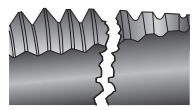

Rapid wear

Wrong type of tap for application
- Refer to tap choice

Incorrect or lack of lubricant
- Use appropriate emulsion or oil

Too high cutting speed
- Refer to recommendations

Work (surface) hardening in drilled hole
- Check drilling recommendations
- Drill worn out

Tap drill hole too small
- Check drilling recommendations

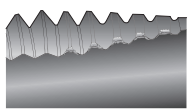

Built-up edge

Incorrect or lack of lubricant
- Use appropriate emulsion or oil

Tap worn out
- Replace tap

Wrong cutting speed
- Refer to recommendations

Wrong type of tap for application
- Refer to tap choice

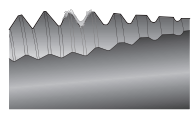

Cutting data - Selection, page(s) 175 - 185

Tool type	MTH-P001 30-48 HRC	MTH-P001-A 30-48 HRC	MTH-P002 30-48 HRC	MTH-P002-A 30-48 HRC	MTH-P003	MTH-P003-A	MTH-P004	MTH-P004-A	MTH-P011
Thread type	M	M	M	M	M	M	M	M	MF
TCTR	6H	6H	6H	6H	6HX	6HX	6HX	6HX	6HX
ULDR	1.5	1.5	1.5	1.5	3	3	3	3	3
THCHT	C	C	C	C	C	C	C	C	C
BSG	SECO-DIN	SECO-DIN	DIN376	DIN376	DIN371	DIN371	DIN376	DIN376	DIN374
Thread size	M3 - M10	M4 - M10	M12 - M20	M12 - M20	M1.6 - M10	M4 - M10	M5 - M30	M12 - M30	MF 4X0.5 - MF 30X2.0
FHA	15°	15°	15°	15°	48°	48°	48°	48°	48°
Coolant	No	Yes	No	Yes	No	Yes	No	Yes	No
Page(s)	186	187	188	189	190	191	192	193	194-195

SMG	v_c								
	MTH- P001	MTH- P001	MTH- P002	MTH- P002	MTH- P003	MTH- P003	MTH- P004	MTH- P004	MTH- P011
P1	—	—	—	—	55	55	55	55	55
P2	—	—	—	—	55	55	55	55	55
P3	—	—	—	—	45	45	45	45	45
P4	—	—	—	—	40	40	40	40	40
P5	—	—	—	—	38	38	38	38	38
P6	—	—	—	—	43	43	43	43	43
P7	—	—	—	—	40	40	40	40	40
P8	—	—	—	—	38	38	38	38	38
P11	—	—	—	—	39	39	39	39	39
P12	—	—	—	—	23	23	23	23	23
M1	—	—	—	—	—	—	—	—	—
M2	—	—	—	—	—	—	—	—	—
M3	—	—	—	—	—	—	—	—	—
M4	—	—	—	—	—	—	—	—	—
M5	—	—	—	—	—	—	—	—	—
K1	—	—	—	—	—	—	—	—	—
K2	—	—	—	—	—	—	—	—	—
K3	—	—	—	—	—	—	—	—	—
K4	—	—	—	—	—	—	—	—	—
K5	—	—	—	—	—	—	—	—	—
K6	—	—	—	—	—	—	—	—	—
K7	—	—	—	—	—	—	—	—	—
N1	—	—	—	—	—	—	—	—	—
N2	—	—	—	—	—	—	—	—	—
N3	—	—	—	—	—	—	—	—	—
N11	—	—	—	—	—	—	—	—	—
H5	17	17	17	17	—	—	—	—	—
H8	17	17	17	17	—	—	—	—	—

SMG = Seco material group
v_c = m/min
Recommended ranges to use for each type of tap:
K001-K002: +25% / -25%
V015-V016: +15% / -15%
V001-V045: +15% / -15%
V048-V050: +35% / -35%
V053-V063: +15% / -

Cutting speeds (v_c) in the table are recommendations for a start value and calculated when running in 2xD, except for V048, V050 that are calculated from 1,5xD.
When running in 1,5xD increse speed by 20% and at 2,5 x D reduce speed by 20%. At 3 x D reduce by 30%.
Due to machine, material and setup condition it is advisable also to optimize cutting data.

Cutting data - Selection, page(s) 175 - 185

Tool type	MTP-P001 30-48 HRC	MTP-P002 30-48 HRC	MTP-P003	MTP-P003-A	MTP-P004	MTP-P004-A	MTP-P011
Thread type	M	M	M	M	M	M	MF
TCTR	6H	6H	5HX/6HX	6HX	6HX	6HX	6HX
ULDR	2.5	2.5	3	3	3	3	3
THCHT	B	B	B	B	B	B	B
BSG	SECO-DIN	DIN376	DIN371	DIN371	DIN376	DIN376	DIN374
Thread size	M3 - M10	M12 - M20	M1 - M10	M4 - M10	M4 - M30	M12 - M30	MF 4X0.5 - MF 30X2.0
FHA							
Coolant	No	No	No	Yes	No	Yes	No
Page(s)	196	197	198	199	200	201	202-203

SMG	v_c						
	MTP- P001	MTP- P002	MTP- P003	MTP- P003	MTP- P004	MTP- P004	MTP- P011
P1	—	—	60	60	60	60	60
P2	—	—	60	60	60	60	60
P3	—	—	50	50	50	50	50
P4	—	—	45	45	45	45	45
P5	—	—	43	43	43	43	43
P6	—	—	48	48	48	48	48
P7	—	—	46	46	46	46	46
P8	—	—	43	43	43	43	43
P11	—	—	44	44	44	44	44
P12	—	—	26	26	26	26	26
M1	—	—	—	—	—	—	—
M2	—	—	—	—	—	—	—
M3	—	—	—	—	—	—	—
M4	—	—	—	—	—	—	—
M5	—	—	—	—	—	—	—
K1	—	—	—	—	—	—	—
K2	—	—	—	—	—	—	—
K3	—	—	—	—	—	—	—
K4	—	—	—	—	—	—	—
K5	—	—	—	—	—	—	—
K6	—	—	—	—	—	—	—
K7	—	—	—	—	—	—	—
N1	—	—	—	—	—	—	—
N2	—	—	—	—	—	—	—
N3	—	—	—	—	—	—	—
N11	—	—	—	—	—	—	—
H5	17	17	—	—	—	—	—
H8	17	17	—	—	—	—	—

SMG = Seco material group
v_c = m/min
Recommended ranges to use for each type of tap:
S005-S010: +25% / -25%
S015-S020: +15% / -15%
V001-V045: +15% / -15%
V048-V050: +35% / -35%
V053-V063: +15% / -

Cutting speeds (v_c) in the table are recommendations for a start value and calculated when running in 2xD, except for V048, V050 that are calculated from 1,5xD.
When running in 1,5xD increse speed by 20% and at 2,5 x D reduce speed by 20%. At 3 x D reduce by 30%.
Due to machine, material and setup condition it is advisable also to optimize cutting data.

Cutting data - Selection, page(s) 175 - 185

Tool type	MTH-M003	MTH-M003-A	MTH-M004	MTH-M004-A	MTP-M003	MTP-M003-A	MTP-M004	MTP-M004-A
Thread type	M	M	M	M	M	M	M	M
TCTR	6H	6H	6H	6H	5HX/6H	6H	6H	6H
ULDR	2.5	2.5	2.5	2.5	2.5	2.5	2.5	2.5
THCHT	C	C	C	C	B	B	B	B
BSG	DIN371	DIN371	DIN376	DIN376	DIN371	DIN371	DIN376	DIN376
Thread size	M1.6 - M10	M4 - M10	M12 - M20	M12 - M20	M1 - M10	M4 -M10	M12 - M20	M12 - M24
FHA	48°	48°	48°	48°				
Coolant	No	Yes	No	Yes	No	Yes	No	Yes
Page(s)	204	205	206	207	208	209	210	211

SMG	v_c							
	MTH- M003	MTH- M003	MTH- M004	MTH- M004	MTP- M003	MTP- M003	MTP- M004	MTP- M004
P1	—	—	—	—	—	—	—	—
P2	—	—	—	—	—	—	—	—
P3	—	—	—	—	—	—	—	—
P4	—	—	—	—	—	—	—	—
P5	—	—	—	—	—	—	—	—
P6	—	—	—	—	—	—	—	—
P7	—	—	—	—	—	—	—	—
P8	—	—	—	—	—	—	—	—
P11	—	—	—	—	—	—	—	—
P12	—	—	—	—	—	—	—	—
M1	12	12	12	12	12	12	12	12
M2	10	10	10	10	10	10	10	10
M3	8	8	8	8	8	8	8	8
M4	6	6	6	6	6	6	6	6
M5	5	5	5	5	5	5	5	5
K1	—	—	—	—	—	—	—	—
K2	—	—	—	—	—	—	—	—
K3	—	—	—	—	—	—	—	—
K4	—	—	—	—	—	—	—	—
K5	—	—	—	—	—	—	—	—
K6	—	—	—	—	—	—	—	—
K7	—	—	—	—	—	—	—	—
N1	—	—	—	—	—	—	—	—
N2	—	—	—	—	—	—	—	—
N3	—	—	—	—	—	—	—	—
N11	—	—	—	—	—	—	—	—
H5	—	—	—	—	—	—	—	—
H8	—	—	—	—	—	—	—	—

SMG = Seco material group
v_c = m/min
Recommended ranges to use for each type of tap:
S005-S010: +25% / -25%
S015-S020: +15% / -15%
V001-V045: +15% / -15%
V048-V050: +35% / -35%
V053-V063: +15% / -

Cutting speeds (v_c) in the table are recommendations for a start value and calculated when running in 2xD, except for V048, V050 that are calculated from 1,5xD.
When running in 1,5xD increse speed by 20% and at 2,5 x D reduce speed by 20%. At 3 x D reduce by 30%.
Due to machine, material and setup condition it is advisable also to optimize cutting data.

Cutting data - Selection, page(s) 175 - 185

Tool type	MTS-K001	MTS-K001-A	MTS-K002	MTS-K002-A	MTS-K011	MTS-K021	MTS-K031	MTS-K041
Thread type	M	M	M	M	MF	G	UNC	UNF
TCTR	6HX	6HX	6HX	6HX	6HX	NORMAL	2BX	2BX
ULDR	2	2.5	2	2.5	2 - 2.5	2	2	2
THCHT	C	C/E	C	C/E	C	C	C	C
BSG	DIN371	DIN371	DIN376	DIN376	DIN374	DIN5156	DIN2184-1	DIN2184-1
Thread size	M3 - M10	M4 - M10	M8 - M42	M12 - M42	MF 10X1.0 - MF 20X1.5	G 1/8-28 - G 1-11	UNC 1/4-20 - UNC 7/8-9	UNF 1/4-28 - UNF 7/8-14
FHA	0°	0°	0°	0°	0°	0°	0°	0°
Coolant	No	Yes	No	Yes	No	No	No	No
Page(s)	212	213	214	215	216	217	218	219

SMG	v_c							
	MTS- K001	MTS- K001	MTS- K002	MTS- K002	MTS- K011	MTS- K021	MTS- K031	MTS- K041
P1	—	—	—	—	—	—	—	—
P2	—	—	—	—	—	—	—	—
P3	—	—	—	—	—	—	—	—
P4	—	—	—	—	—	—	—	—
P5	—	—	—	—	—	—	—	—
P6	—	—	—	—	—	—	—	—
P7	—	—	—	—	—	—	—	—
P8	—	—	—	—	—	—	—	—
P11	—	—	—	—	—	—	—	—
P12	—	—	—	—	—	—	—	—
M1	—	—	—	—	—	—	—	—
M2	—	—	—	—	—	—	—	—
M3	—	—	—	—	—	—	—	—
M4	—	—	—	—	—	—	—	—
M5	—	—	—	—	—	—	—	—
K1	36	36	36	36	36	36	36	36
K2	31	31	31	31	31	31	31	31
K3	26	26	26	26	26	26	26	26
K4	25	25	25	25	25	25	25	25
K5	15	15	15	15	15	15	15	15
K6	22	22	22	22	22	22	22	22
K7	19	19	19	19	19	19	19	19
N1	—	—	—	—	—	—	—	—
N2	—	—	—	—	—	—	—	—
N3	—	—	—	—	—	—	—	—
N11	—	—	—	—	—	—	—	—
H5	—	—	—	—	—	—	—	—
H8	—	—	—	—	—	—	—	—

SMG = Seco material group
v_c = m/min
Recommended ranges to use for each type of tap:
S005-S010: +25% / -25%
S015-S020: +15% / -15%
V001-V045: +15% / -15%
V048-V050: +35% / -35%
V053-V063: +15% / -

Cutting speeds (v_c) in the table are recommendations for a start value and calculated when running in 2xD, except for V048, V050 that are calculated from 1,5xD.
When running in 1,5xD increse speed by 20% and at 2,5 x D reduce speed by 20%. At 3 x D reduce by 30%.
Due to machine, material and setup condition it is advisable also to optimize cutting data.

Cutting data - Selection, page(s) 175 - 185

Tool type	MTH-N001	MTH-N002	MTP-N001	MTP-N001-A	MTP-N002	MTP-N002-A
Thread type	M	M	M	M	M	M
TCTR	6H	6H	6H	6H	6H	6H
ULDR	1.5	1.5	3	3	3	3
THCHT	C	C	B	B	B	B
BSG	DIN371	DIN376	DIN371	DIN371	DIN376	DIN376
Thread size	M3 - M10	M12 - M16	M3 - M10	M4 - M10	M12 - M16	M12 - M16
FHA	15°	15°				
Coolant	No	No	No	Yes	No	Yes
Page(s)	220	221	222	223	224	225

SMG	v_c					
	MTH- N001	MTH- N002	MTP- N001	MTP- N001	MTP- N002	MTP- N002
P1	—	—	—	—	—	—
P2	—	—	—	—	—	—
P3	—	—	—	—	—	—
P4	—	—	—	—	—	—
P5	—	—	—	—	—	—
P6	—	—	—	—	—	—
P7	—	—	—	—	—	—
P8	—	—	—	—	—	—
P11	—	—	—	—	—	—
P12	—	—	—	—	—	—
M1	—	—	—	—	—	—
M2	—	—	—	—	—	—
M3	—	—	—	—	—	—
M4	—	—	—	—	—	—
M5	—	—	—	—	—	—
K1	—	—	—	—	—	—
K2	—	—	—	—	—	—
K3	—	—	—	—	—	—
K4	—	—	—	—	—	—
K5	—	—	—	—	—	—
K6	—	—	—	—	—	—
K7	—	—	—	—	—	—
N1	55	55	55	55	55	55
N2	35	35	35	35	35	35
N3	23	23	23	23	23	23
N11	31	31	31	31	31	31
H5	—	—	—	—	—	—
H8	—	—	—	—	—	—

SMG = Seco material group
v_c = m/min
Recommended ranges to use for each type of tap:
S005-S010: +25% / -25%
S015-S020: +15% / -15%
V001-V045: +15% / -15%
V048-V050: +35% / -35%
V053-V063: +15% / -

Cutting speeds (v_c) in the table are recommendations for a start value and calculated when running in 2xD, except for V048, V050 that are calculated from 1,5xD.
When running in 1,5xD increse speed by 20% and at 2,5 x D reduce speed by 20%. At 3 x D reduce by 30%.
Due to machine, material and setup condition it is advisable also to optimize cutting data.

Cutting data - Selection, page(s) 175 - 185

Tool type	MF-V053	MF-V054	MF-V055	MF-V056	MF-V057	MF-V058	MF-V059	MF-V060-A	MF-V063	MF-V063-A
Thread type	M	M	M	UNC	UNF	M	G	M	MF	MF
TCTR	6HX	5HX/6HX	6HX	2BX	2BX	6GX	NORMAL-X	6HX	6HX	6HX
ULDR	3	3	3	3	3	3	3	3	3	3
THCHT	E	C	C	C	C	C	C	C	C	C
BSG	DIN2174	DIN2174	DIN2174	DIN2184-1	DIN2184-1	DIN2174	DIN2189	DIN2174	DIN2174	DIN2174
Thread size	M3 - M10	M1 - M2.6	M3 - M48	UNC 4-40 - UNC 1-8	UNF 10-32 - UNF 1-12	M3 - M12	G 1/8-28 - G 5/8-14	M5 - M48	MF 5X0.5 - MF 16X1.5	MF 5X0.5 - MF 16X1.5
FHA										
Coolant	No	No	No	No	No	No	No	Yes	No	Yes
Page(s)	226	227	228	229	230	231	232	233	234	235

	v_c									
SMG	MF- V053	MF- V054	MF- V055	MF- V056	MF- V057	MF- V058	MF- V059	MF- V060	MF- V063	MF- V063
P1	55	55	55	55	55	55	55	55	55	55
P2	55	55	55	55	55	55	55	55	55	55
P3	48	48	48	48	48	48	48	48	48	48
P4	42	42	42	42	42	42	42	42	42	42
P5	40	40	40	40	40	40	40	40	40	40
P6	45	45	45	45	45	45	45	45	45	45
P7	42	42	42	42	42	42	42	42	42	42
P8	40	40	40	40	40	40	40	40	40	40
P11	41	41	41	41	41	41	41	41	41	41
P12	24	24	24	24	24	24	24	24	24	24
M1	17	17	17	17	17	17	17	17	17	17
M2	14	14	14	14	14	14	14	14	14	14
M3	11	11	11	11	11	11	11	11	11	11
M4	8	8	8	8	8	8	8	8	8	8
M5	7	7	7	7	7	7	7	7	7	7
K1	—	—	—	—	—	—	—	—	—	—
K2	—	—	—	—	—	—	—	—	—	—
K3	—	—	—	—	—	—	—	—	—	—
K4	—	—	—	—	—	—	—	—	—	—
K5	—	—	—	—	—	—	—	—	—	—
K6	—	—	—	—	—	—	—	—	—	—
K7	—	—	—	—	—	—	—	—	—	—
N1	50	55	55	55	55	55	55	55	55	55
N2	32	35	35	35	35	35	35	35	35	35
N3	21	23	23	23	23	23	23	23	23	23
N11	28	31	31	31	31	31	31	31	31	31
H5	—	—	—	—	—	—	—	—	—	—
H8	—	—	—	—	—	—	—	—	—	—

SMG = Seco material group
v_c = m/min
Recommended ranges to use for each type of tap:
S005-S010: +25% / -25%
S015-S020: +15% / -15%
V001-V045: +15% / -15%
V048-V050: +35% / -35%
V053-V063: +15% / -

Cutting speeds (v_c) in the table are recommendations for a start value and calculated when running in 2xD, except for V048, V050 that are calculated from 1,5xD.
When running in 1,5xD increse speed by 20% and at 2,5 x D reduce speed by 20%. At 3 x D reduce by 30%.
Due to machine, material and setup condition it is advisable also to optimize cutting data.

Cutting data - Selection, page(s) 175 - 185

Tool type	MTH-V011	MTH-V015	MTH-V016	MTH-V025	MTH-V026	MTH-V028	MTH-V029	MTH-V030	MTH-V030-A
Thread type	MF	M	M	M	M	M	M	M	M
TCTR	6HX	6H	6H	6H	6H	6G	6G	6H	6H
ULDR	2	2	2	3	3	3	3	2.5	2.5
THCHT	C	C	C	C	C	C	C	C	C
BSG	DIN374	DIN371	DIN376	DIN371	DIN376	DIN371	DIN376	DIN371	DIN371
Thread size	MF 8X0.75 - MF 24X2.0	M3 - M10	M12 - M36	M3 - M10	M12 - M20	M3 - M10	M12 - M20	M2 - M10	M4 - M10
FHA	15°	15°	15°	45°	45°	45°	45°	45°	45°
Coolant	No	No	No	No	No	No	No	No	Yes
Page(s)	236	237	238	239	240	241	242	243	244

SMG	v_c								
	MTH- V011	MTH- V015	MTH- V016	MTH- V025	MTH- V026	MTH- V028	MTH- V029	MTH- V030	MTH- V030
P1	40	40	40	40	40	40	40	40	40
P2	39	39	39	39	39	39	39	39	39
P3	33	33	33	33	33	33	33	33	33
P4	29	29	29	29	29	29	29	29	29
P5	28	28	28	28	28	28	28	28	28
P6	31	31	31	31	31	31	31	31	31
P7	30	30	30	30	30	30	30	30	30
P8	28	28	28	28	28	28	28	28	28
P11	29	29	29	29	29	29	29	29	29
P12	17	17	17	17	17	17	17	17	17
M1	9	9	9	9	9	9	9	9	9
M2	7	7	7	7	7	7	7	7	7
M3	5	5	5	5	5	5	5	5	5
M4	4	4	4	4	4	4	4	4	4
M5	3	3	3	3	3	3	3	3	3
K1	—	—	—	—	—	—	—	—	—
K2	—	—	—	—	—	—	—	—	—
K3	—	—	—	—	—	—	—	—	—
K4	—	—	—	—	—	—	—	—	—
K5	—	—	—	—	—	—	—	—	—
K6	—	—	—	—	—	—	—	—	—
K7	—	—	—	—	—	—	—	—	—
N1	37	37	37	37	37	37	37	37	37
N2	24	24	24	24	24	24	24	24	24
N3	16	16	16	16	16	16	16	16	16
N11	21	21	21	21	21	21	21	21	21
H5	—	—	—	—	—	—	—	—	—
H8	—	—	—	—	—	—	—	—	—

SMG = Seco material group
v_c = m/min
Recommended ranges to use for each type of tap:
S005-S010: +25% / -25%
S015-S020: +15% / -15%
V001-V045: +15% / -15%
V048-V050: +35% / -35%
V053-V063: +15% / -

Cutting speeds (v_c) in the table are recommendations for a start value and calculated when running in 2xD, except for V048, V050 that are calculated from 1,5xD.
When running in 1,5xD increse speed by 20% and at 2,5 x D reduce speed by 20%. At 3 x D reduce by 30%.
Due to machine, material and setup condition it is advisable also to optimize cutting data.

Cutting data - Selection, page(s) 175 - 185

Tool type	MTH-V033	MTH-V033-A	MTH-V038	MTH-V038-A	MTH-V040	MTH-V043	MTH-V045
Thread type	M	M	MF	MF	UNC	UNF	G
TCTR	6H	6H	6H	6H	2B	2B	NORMAL
ULDR	2.5	2.5	2.5	2.5	2.5	2.5	2.5
THCHT	C	C	C	C	C	C	C
BSG	DIN376	DIN376	DIN374	DIN374	DIN2184-1	DIN2184-1	DIN5156
Thread size	M6 - M64	M12 - M64	MF 4X0.5 - MF 30X2.0	MF 6X0.75 - MF 30X2.0	UNC 4-40 - UNC 5/8-11	UNF 8-36 - UNF 1-12	G 1/8-28 - G11/2-11
FHA	45°	45°	45°	45°	45°	45°	45°
Coolant	No	Yes	No	Yes	No	No	No
Page(s)	245	246	247-248	249-250	251	252	253

SMG	v_c						
	MTH- V033	MTH- V033	MTH- V038	MTH- V038	MTH- V040	MTH- V043	MTH- V045
P1	40	40	40	40	40	40	40
P2	39	39	39	39	39	39	39
P3	33	33	33	33	33	33	33
P4	29	29	29	29	29	29	29
P5	28	28	28	28	28	28	28
P6	31	31	31	31	31	31	31
P7	30	30	30	30	30	30	30
P8	28	28	28	28	28	28	28
P11	29	29	29	29	29	29	29
P12	17	17	17	17	17	17	17
M1	9	9	9	9	9	9	9
M2	7	7	7	7	7	7	7
M3	5	5	5	5	5	5	5
M4	4	4	4	4	4	4	4
M5	3	3	3	3	3	3	3
K1	—	—	—	—	—	—	—
K2	—	—	—	—	—	—	—
K3	—	—	—	—	—	—	—
K4	—	—	—	—	—	—	—
K5	—	—	—	—	—	—	—
K6	—	—	—	—	—	—	—
K7	—	—	—	—	—	—	—
N1	37	37	37	37	37	37	37
N2	24	24	24	24	24	24	24
N3	16	16	16	16	16	16	16
N11	21	21	21	21	21	21	21
H5	—	—	—	—	—	—	—
H8	—	—	—	—	—	—	—

SMG = Seco material group
v_c = m/min
Recommended ranges to use for each type of tap:
S005-S010: +25% / -25%
S015-S020: +15% / -15%
V001-V045: +15% / -15%
V048-V050: +35% / -35%
V053-V063: +15% / -

Cutting speeds (v_c) in the table are recommendations for a start value and calculated when running in 2xD, except for V048, V050 that are calculated from 1,5xD.
When running in 1,5xD increse speed by 20% and at 2,5 x D reduce speed by 20%. At 3 x D reduce by 30%.
Due to machine, material and setup condition it is advisable also to optimize cutting data.

Cutting data - Selection, page(s) 175 - 185

Tool type	MTP-V001	MTP-V002	MTP-V005	MTP-V006	MTP-V007	MTP-V007-A	MTP-V008	MTP-V008-A
Thread type	M	M	M	M	M	M	M	M
TCTR	6H	6H	6G	6G	6H	6H	6H	6H
ULDR	3	3	2.5	2.5	2.5	2.5	2.5	2.5
THCHT	B	B	B	B	B	B	B	B
BSG	DIN371	DIN376	DIN371	DIN376	DIN371	DIN371	DIN376	DIN376
Thread size	M3 - M10	M12 - M20	M3 - M10	M12 - M20	M2 - M10	M4 - M10	M3 - M36	M12 - M36
FHA								
Coolant	No	No	No	No	No	Yes	No	Yes
Page(s)	254	255	256	257	258	259	260	261

SMG	v_c							
	MTP- V001	MTP- V002	MTP- V005	MTP- V006	MTP- V007	MTP- V007	MTP- V008	MTP- V008
P1	40	40	40	40	40	40	40	40
P2	39	39	39	39	39	39	39	39
P3	33	33	33	33	33	33	33	33
P4	29	29	29	29	29	29	29	29
P5	28	28	28	28	28	28	28	28
P6	31	31	31	31	31	31	31	31
P7	30	30	30	30	30	30	30	30
P8	28	28	28	28	28	28	28	28
P11	29	29	29	29	29	29	29	29
P12	17	17	17	17	17	17	17	17
M1	9	9	9	9	9	9	9	9
M2	7	7	7	7	7	7	7	7
M3	5	5	5	5	5	5	5	5
M4	4	4	4	4	4	4	4	4
M5	3	3	3	3	3	3	3	3
K1	—	—	—	—	—	—	—	—
K2	—	—	—	—	—	—	—	—
K3	—	—	—	—	—	—	—	—
K4	—	—	—	—	—	—	—	—
K5	—	—	—	—	—	—	—	—
K6	—	—	—	—	—	—	—	—
K7	—	—	—	—	—	—	—	—
N1	37	37	37	37	37	37	37	37
N2	24	24	24	24	24	24	24	24
N3	16	16	16	16	16	16	16	16
N11	21	21	21	21	21	21	21	21
H5	—	—	—	—	—	—	—	—
H8	—	—	—	—	—	—	—	—

SMG = Seco material group
v_c = m/min
Recommended ranges to use for each type of tap:
S005-S010: +25% / -25%
S015-S020: +15% / -15%
V001-V045: +15% / -15%
V048-V050: +35% / -35%
V053-V063: +15% / -

Cutting speeds (v_c) in the table are recommendations for a start value and calculated when running in 2xD, except for V048, V050 that are calculated from 1,5xD.
When running in 1,5xD increse speed by 20% and at 2,5 x D reduce speed by 20%. At 3 x D reduce by 30%.
Due to machine, material and setup condition it is advisable also to optimize cutting data.

Cutting data - Selection, page(s) 175 - 185

Tool type	MTP-V014	MTP-V014-A	MTP-V017	MTP-V020	MTP-V023
Thread type	MF	MF	UNC	UNF	G
TCTR	6H	6H	2B	2B	NORMAL
ULDR	2.5	2.5	2.5	2.5	2.5
THCHT	B	B	B	B	B
BSG	DIN374	DIN374	DIN2184-1	DIN2184-1	DIN5156
Thread size	MF 4X0.5 - MF 30X2.0	MF 6X0.75 - MF 24X2.0	UNC 4-40 - UNC 5/8-11	UNF 8-36 - UNF 5/8-18	G 1/8-28 - G 5/8-14
FHA					
Coolant	No	Yes	No	No	No
Page(s)	262-263	264	265	266	267

SMG	v_c				
	MTP- V014	MTP- V014	MTP- V017	MTP- V020	MTP- V023
P1	40	40	40	40	40
P2	39	39	39	39	39
P3	33	33	33	33	33
P4	29	29	29	29	29
P5	28	28	28	28	28
P6	31	31	31	31	31
P7	30	30	30	30	30
P8	28	28	28	28	28
P11	29	29	29	29	29
P12	17	17	17	17	17
M1	9	9	9	9	9
M2	7	7	7	7	7
M3	5	5	5	5	5
M4	4	4	4	4	4
M5	3	3	3	3	3
K1	—	—	—	—	—
K2	—	—	—	—	—
K3	—	—	—	—	—
K4	—	—	—	—	—
K5	—	—	—	—	—
K6	—	—	—	—	—
K7	—	—	—	—	—
N1	37	37	37	37	37
N2	24	24	24	24	24
N3	16	16	16	16	16
N11	21	21	21	21	21
H5	—	—	—	—	—
H8	—	—	—	—	—

SMG = Seco material group
v_c = m/min
Recommended ranges to use for each type of tap:
S005-S010: +25% / -25%
S015-S020: +15% / -15%
V001-V045: +15% / -15%
V048-V050: +35% / -35%
V053-V063: +15% / -

Cutting speeds (v_c) in the table are recommendations for a start value and calculated when running in 2xD, except for V048, V050 that are calculated from 1,5xD.
When running in 1,5xD increse speed by 20% and at 2,5 x D reduce speed by 20%. At 3 x D reduce by 30%.
Due to machine, material and setup condition it is advisable also to optimize cutting data.

Cutting data - Selection, page(s) 175 - 185

Tool type	MTH-V048	MTH-V050
Thread type	NPT	NPTF
TCTR	NORMAL	NORMAL
ULDR	1.5	1.5
THCHT	C	C
BSG	DIN/ANSI	DIN/ANSI
Thread size	NPT 1/16-27 NPT 1-11.5	NPTF 1/16-27 NPTF 3/4-14
FHA	15°	15°
Coolant	No	No
Page(s)	268	269

SMG	v_c	
	MTH- V048	MTH- V050
P1	11	11
P2	11	11
P3	10	10
P4	8	8
P5	8	8
P6	9	9
P7	8	8
P8	8	8
P11	8	8
P12	5	5
M1	9	9
M2	7	7
M3	5	5
M4	4	4
M5	3	3
K1	14	14
K2	12	12
K3	10	10
K4	10	10
K5	6	6
K6	9	9
K7	8	8
N1	23	23
N2	15	15
N3	10	10
N11	13	13
H5	—	—
H8	—	—

SMG = Seco material group
v_c = m/min
Recommended ranges to use for each type of tap:
S005-S010: +25% / -25%
S015-S020: +15% / -15%
V001-V045: +15% / -15%
V048-V050: +35% / -35%
V053-V063: +15% / -

Cutting speeds (v_c) in the table are recommendations for a start value and calculated when running in 2xD, except for V048, V050 that are calculated from 1,5xD.
When running in 1,5xD increse speed by 20% and at 2,5 x D reduce speed by 20%. At 3 x D reduce by 30%.
Due to machine, material and setup condition it is advisable also to optimize cutting data.

MTH-P001

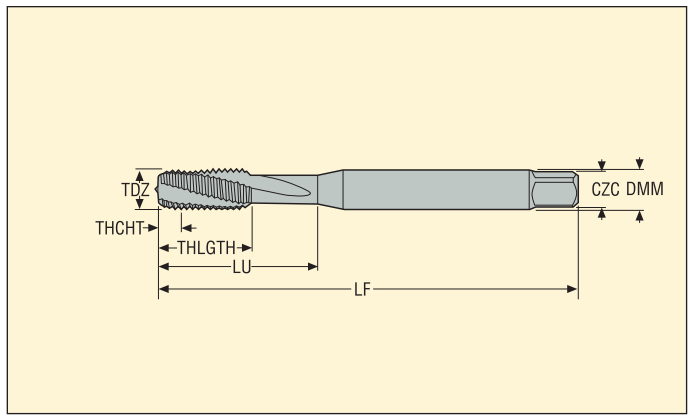

- For cutting data see page(s) 175
- Coating: TiAlN
- Substrate: HSS-E-PM

Designation	TDZ	Pitch		Dimensions in mm					NOF	PHDR	BSG	TCTR	THCHT
		mm	TPI	DMM	LU	THLGTH	LF	CZC					
MTH-M3X0.50ISO6H-BC-P001	M3	0,50	–	4,5	12,0	12,0	63,0	4.50X3.40	3	2,5	SECO-DIN	6H	C
MTH-M4X0.70ISO6H-BC-P001	M4	0,70	–	6,0	13,0	13,0	70,0	6.00X4.90	3	3,4	SECO-DIN	6H	C
MTH-M5X0.80ISO6H-BC-P001	M5	0,80	–	6,0	15,0	15,0	80,0	6.00X4.90	3	4,3	SECO-DIN	6H	C
MTH-M6X1.00ISO6H-BC-P001	M6	1,00	–	8,0	18,0	18,0	90,0	8.00X6.20	3	5,1	SECO-DIN	6H	C
MTH-M8X1.25ISO6H-BC-P001	M8	1,25	–	10,0	20,0	20,0	100,0	10.00X8.00	3	6,8	SECO-DIN	6H	C
MTH-M10X1.50ISO6H-BC-P001	M10	1,50	–	10,0	39,0	20,0	100,0	10.00X8.00	3	8,6	SECO-DIN	6H	C

Please check availability in current price and stock-list

MTH-P001-A

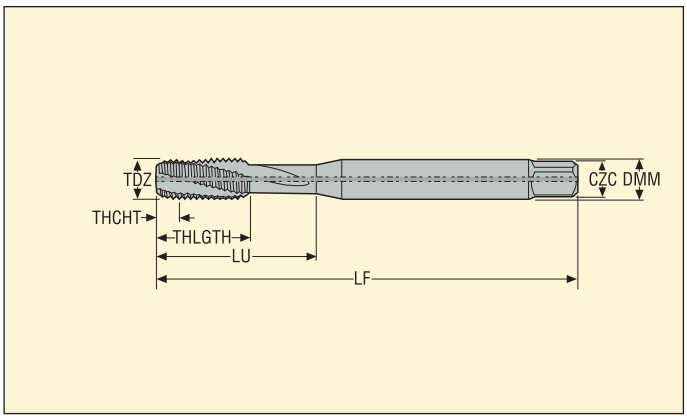

- For cutting data see page(s) 175
- Coating: TiAlN
- Substrate: HSS-E-PM
- Internal coolant

Designation	TDZ	Pitch		Dimensions in mm					NOF	PHDR	BSG	TCTR	THCHT
		mm	TPI	DMM	LU	THLGTH	LF	CZC					
MTH-M4X0.70ISO6H-BC-P001-A	M4	0,70	–	6,0	13,0	13,0	70,0	6.00X4.90	3	3,4	SECO-DIN	6H	C
MTH-M5X0.80ISO6H-BC-P001-A	M5	0,80	–	6,0	15,0	15,0	80,0	6.00X4.90	3	4,3	SECO-DIN	6H	C
MTH-M6X1.00ISO6H-BC-P001-A	M6	1,00	–	8,0	18,0	18,0	90,0	8.00X6.20	3	5,1	SECO-DIN	6H	C
MTH-M8X1.25ISO6H-BC-P001-A	M8	1,25	–	10,0	20,0	20,0	100,0	10.00X8.00	3	6,8	SECO-DIN	6H	C
MTH-M10X1.50ISO6H-BC-P001-A	M10	1,50	–	10,0	39,0	20,0	100,0	10.00X8.00	3	8,6	SECO-DIN	6H	C

Please check availability in current price and stock-list

MTH-P002

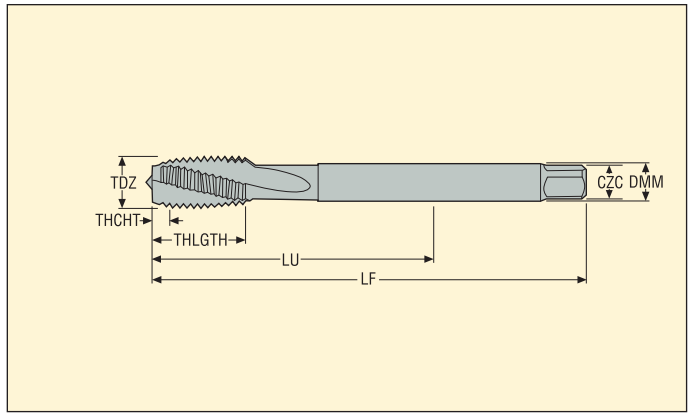

- For cutting data see page(s) 175
- Coating: TiAlN
- Substrate: HSS-E-PM

Designation	TDZ	Pitch		Dimensions in mm					NOF	PHDR	BSG	TCTR	THCHT
		mm	TPI	DMM	LU	THLGTH	LF	CZC					
MTH-M12X1.75ISO6H-BC-P002	M12	1,75	–	9,0	83,0	23,0	110,0	9.00X7.00	4	10,4	DIN376	6H	C
MTH-M14X2.00ISO6H-BC-P002	M14	2,00	–	11,0	81,0	25,0	110,0	11.00X9.00	4	12,1	DIN376	6H	C
MTH-M16X2.00ISO6H-BC-P002	M16	2,00	–	12,0	68,0	25,0	110,0	12.00X9.00	4	14,1	DIN376	6H	C
MTH-M18X2.50ISO6H-BC-P002	M18	2,50	–	14,0	81,0	30,0	125,0	14.00X11.00	4	15,7	DIN376	6H	C
MTH-M20X2.50ISO6H-BC-P002	M20	2,50	–	16,0	95,0	30,0	140,0	16.00X12.00	4	17,7	DIN376	6H	C

Please check availability in current price and stock-list

MTH-P002-A

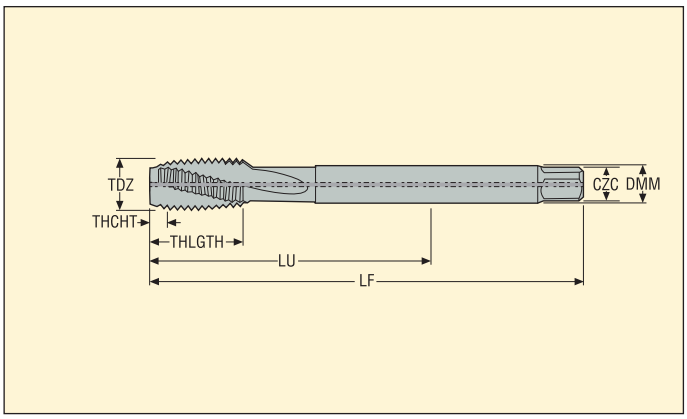

- For cutting data see page(s) 175
- Coating: TiAlN
- Substrate: HSS-E-PM
- Internal coolant

Designation	TDZ	Pitch		Dimensions in mm					NOF	PHDR	BSG	TCTR	THCHT
		mm	TPI	DMM	LU	THLGTH	LF	CZC					
MTH-M12X1.75ISO6H-BC-P002-A	M12	1,75	–	9,0	83,0	23,0	110,0	9.00X7.00	4	10,4	DIN376	6H	C
MTH-M14X2.00ISO6H-BC-P002-A	M14	2,00	–	11,0	81,0	25,0	110,0	11.00X9.00	4	12,1	DIN376	6H	C
MTH-M16X2.00ISO6H-BC-P002-A	M16	2,00	–	12,0	68,0	25,0	110,0	12.00X9.00	4	14,1	DIN376	6H	C
MTH-M18X2.50ISO6H-BC-P002-A	M18	2,50	–	14,0	81,0	30,0	125,0	14.00X11.00	4	15,7	DIN376	6H	C
MTH-M20X2.50ISO6H-BC-P002-A	M20	2,50	–	16,0	95,0	30,0	140,0	16.00X12.00	4	17,7	DIN376	6H	C

Please check availability in current price and stock-list

MTH-P003

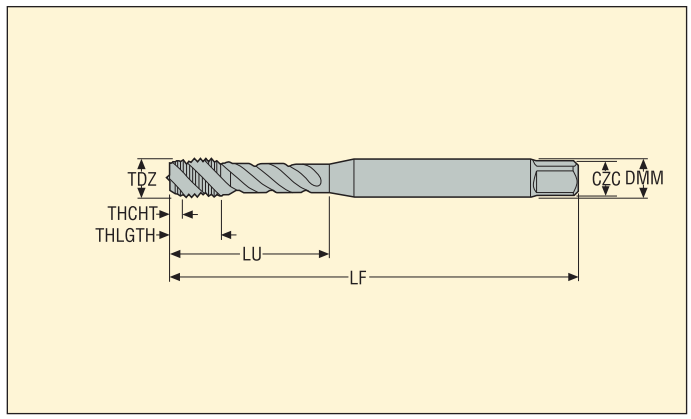

- For cutting data see page(s) 175
- Coating: AlTiN-based
- Substrate: HSS-E-PM

Designation	TDZ	Pitch mm	Pitch TPI	Dimensions in mm DMM	LU	THLGTH	LF	CZC	NOF	PHDR	BSG	TCTR	THCHT
MTH-M1.6X0.35ISO6HX-BC-P003	M1.6	0,35	–	2,5	6,0	4,0	40,0	2.50X2.10	2	1,3	DIN371	6HX	C
MTH-M2X0.40ISO6HX-BC-P003	M2	0,40	–	2,8	9,0	4,0	45,0	2.80X2.10	2	1,6	DIN371	6HX	C
MTH-M2.2X0.45ISO6HX-BC-P003	M2.2	0,45	–	2,8	12,0	4,0	45,0	2.80X2.10	2	1,8	DIN371	6HX	C
MTH-M2.3X0.40ISO6HX-BC-P003	M2.3	0,40	–	2,8	12,0	4,0	45,0	2.80X2.10	2	1,9	DIN371	6HX	C
MTH-M2.5X0.45ISO6HX-BC-P003	M2.5	0,45	–	2,8	12,5	4,0	50,0	2.80X2.10	2	2,1	DIN371	6HX	C
MTH-M2.6X0.45ISO6HX-BC-P003	M2.6	0,45	–	2,8	12,5	4,0	50,0	2.80X2.10	2	2,15	DIN371	6HX	C
MTH-M3X0.50ISO6HX-BC-P003	M3	0,50	–	3,5	18,0	5,9	56,0	3.50X2.70	3	2,5	DIN371	6HX	C
MTH-M3.5X0.60ISO6HX-BC-P003	M3.5	0,60	–	4,0	20,0	7,0	56,0	4.00X3.00	3	2,9	DIN371	6HX	C
MTH-M4X0.70ISO6HX-BC-P003	M4	0,70	–	4,5	21,0	6,7	63,0	4.50X3.40	3	3,4	DIN371	6HX	C
MTH-M5X0.80ISO6HX-BC-P003	M5	0,80	–	6,0	25,0	7,7	70,0	6.00X4.90	3	4,3	DIN371	6HX	C
MTH-M6X1.00ISO6HX-BC-P003	M6	1,00	–	6,0	30,0	10,0	80,0	6.00X4.90	3	5,1	DIN371	6HX	C
MTH-M7X1.00ISO6HX-BC-P003	M7	1,00	–	7,0	30,0	10,0	80,0	7.00X5.50	3	6,1	DIN371	6HX	C
MTH-M8X1.25ISO6HX-BC-P003	M8	1,25	–	8,0	35,0	11,6	90,0	8.00X6.20	3	6,8	DIN371	6HX	C
MTH-M10X1.50ISO6HX-BC-P003	M10	1,50	–	10,0	39,0	15,1	100,0	10.00X8.00	3	8,6	DIN371	6HX	C

Please check availability in current price and stock-list

MTH-P003-A

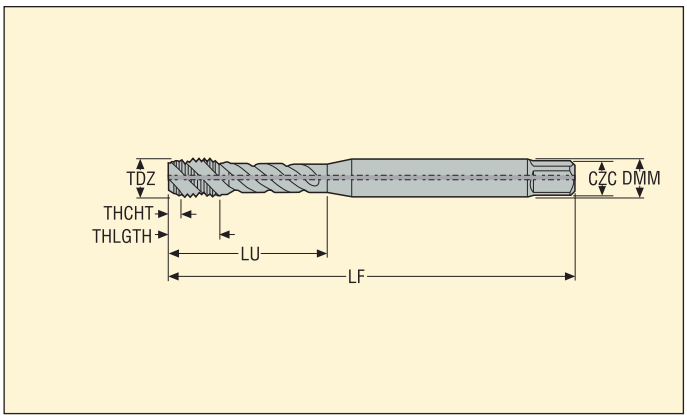

- For cutting data see page(s) 175
- Coating: AlTiN-based
- Substrate: HSS-E-PM
- Internal coolant

Designation	TDZ	Pitch		Dimensions in mm					NOF	PHDR	BSG	TCTR	THCHT
		mm	TPI	DMM	LU	THLGTH	LF	CZC					
MTH-M4X0.70ISO6HX-BC-P003-A	M4	0,70	–	4,5	21,0	6,7	63,0	4.50X3.40	3	3,4	DIN371	6HX	C
MTH-M5X0.80ISO6HX-BC-P003-A	M5	0,80	–	6,0	25,0	7,7	70,0	6.00X4.90	3	4,3	DIN371	6HX	C
MTH-M6X1.00ISO6HX-BC-P003-A	M6	1,00	–	6,0	30,0	10,0	80,0	6.00X4.90	3	5,1	DIN371	6HX	C
MTH-M7X1.00ISO6HX-BC-P003-A	M7	1,00	–	7,0	30,0	10,0	80,0	7.00X5.50	3	6,1	DIN371	6HX	C
MTH-M8X1.25ISO6HX-BC-P003-A	M8	1,25	–	8,0	35,0	11,6	90,0	8.00X6.20	3	6,8	DIN371	6HX	C
MTH-M10X1.50ISO6HX-BC-P003-A	M10	1,50	–	10,0	39,0	15,1	100,0	10.00X8.00	3	8,6	DIN371	6HX	C

Please check availability in current price and stock-list

MTH-P004

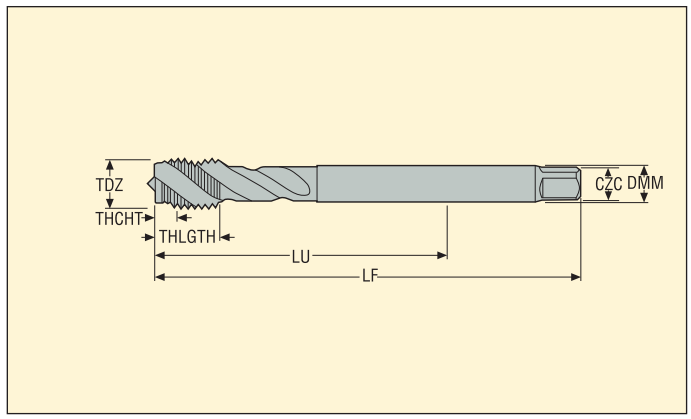

- For cutting data see page(s) 175
- Coating: AlTiN-based
- Substrate: HSS-E-PM

Designation	TDZ	Pitch		Dimensions in mm					NOF	PHDR	BSG	TCTR	THCHT
		mm	TPI	DMM	LU	THLGTH	LF	CZC					
MTH-M5X0.80ISO6HX-BC-P004	M5	0,80	–	3,5	49,0	8,0	70,0	3.50X2.70	3	4,3	DIN376	6HX	C
MTH-M6X1.00ISO6HX-BC-P004	M6	1,00	–	4,5	59,0	10,0	80,0	4.50X3.40	3	5,1	DIN376	6HX	C
MTH-M7X1.00ISO6HX-BC-P004	M7	1,00	–	5,5	59,0	10,0	80,0	5.50X4.30	3	6,1	DIN376	6HX	C
MTH-M8X1.25ISO6HX-BC-P004	M8	1,25	–	6,0	67,0	13,0	90,0	6.00X4.90	3	6,8	DIN376	6HX	C
MTH-M10X1.50ISO6HX-BC-P004	M10	1,50	–	7,0	77,0	20,0	100,0	7.00X5.50	3	8,6	DIN376	6HX	C
MTH-M12X1.75ISO6HX-BC-P004	M12	1,75	–	9,0	83,0	16,0	110,0	9.00X7.00	3	10,4	DIN376	6HX	C
MTH-M14X2.00ISO6HX-BC-P004	M14	2,00	–	11,0	81,0	25,0	110,0	11.00X9.00	3	12,1	DIN376	6HX	C
MTH-M16X2.00ISO6HX-BC-P004	M16	2,00	–	12,0	68,0	20,0	110,0	12.00X9.00	4	14,1	DIN376	6HX	C
MTH-M18X2.50ISO6HX-BC-P004	M18	2,50	–	14,0	81,0	25,0	125,0	14.00X11.00	4	15,7	DIN376	6HX	C
MTH-M20X2.50ISO6HX-BC-P004	M20	2,50	–	16,0	95,0	25,0	140,0	16.00X12.00	4	17,7	DIN376	6HX	C
MTH-M22X2.50ISO6HX-BC-P004	M22	2,50	–	18,0	93,0	25,0	140,0	18.00X14.50	4	19,7	DIN376	6HX	C
MTH-M24X3.00ISO6HX-BC-P004	M24	3,00	–	18,0	113,0	30,0	160,0	18.00X14.50	4	21,0	DIN376	6HX	C
MTH-M27X3.00ISO6HX-BC-P004	M27	3,00	–	20,0	97,0	30,0	160,0	20.00X16.00	4	24,0	DIN376	6HX	C
MTH-M30X3.50ISO6HX-BC-P004	M30	3,50	–	22,0	115,0	36,0	180,0	22.00X18.00	4	26,5	DIN376	6HX	C

Please check availability in current price and stock-list

MTH-P004-A

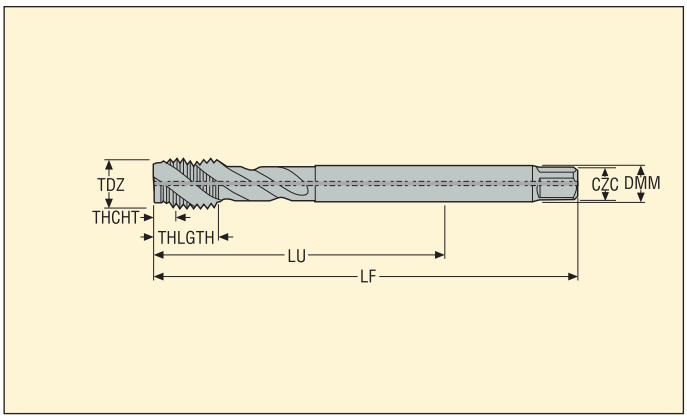

- For cutting data see page(s) 175
- Coating: AlTiN-based
- Substrate: HSS-E-PM
- Internal coolant

Designation	TDZ	Pitch		Dimensions in mm					NOF	PHDR	BSG	TCTR	THCHT
		mm	TPI	DMM	LU	THLGTH	LF	CZC					
MTH-M12X1.75ISO6HX-BC-P004-A	M12	1,75	–	9,0	83,0	16,0	110,0	9.00X7.00	3	10,4	DIN376	6HX	C
MTH-M14X2.00ISO6HX-BC-P004-A	M14	2,00	–	11,0	81,0	25,0	110,0	11.00X9.00	3	12,1	DIN376	6HX	C
MTH-M16X2.00ISO6HX-BC-P004-A	M16	2,00	–	12,0	68,0	20,0	110,0	12.00X9.00	4	14,1	DIN376	6HX	C
MTH-M18X2.50ISO6HX-BC-P004-A	M18	2,50	–	14,0	81,0	25,0	125,0	14.00X11.00	4	15,7	DIN376	6HX	C
MTH-M20X2.50ISO6HX-BC-P004-A	M20	2,50	–	16,0	95,0	25,0	140,0	16.00X12.00	4	17,7	DIN376	6HX	C
MTH-M22X2.50ISO6HX-BC-P004-A	M22	2,50	–	18,0	93,0	25,0	140,0	18.00X14.50	4	19,7	DIN376	6HX	C
MTH-M24X3.00ISO6HX-BC-P004-A	M24	3,00	–	18,0	113,0	30,0	160,0	18.00X14.50	4	21,0	DIN376	6HX	C
MTH-M27X3.00ISO6HX-BC-P004-A	M27	3,00	–	20,0	97,0	30,0	160,0	20.00X16.00	4	24,0	DIN376	6HX	C
MTH-M30X3.50ISO6HX-BC-P004-A	M30	3,50	–	22,0	115,0	36,0	180,0	22.00X18.00	4	26,5	DIN376	6HX	C

Please check availability in current price and stock-list

MTH-P011

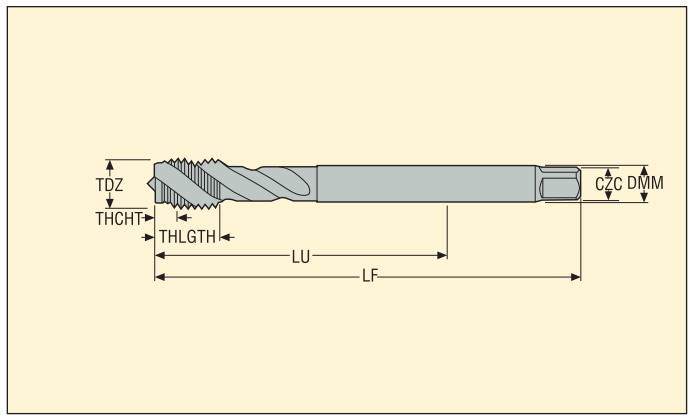

- For cutting data see page(s) 175
- Coating: AlTiN-based
- Substrate: HSS-E-PM

Designation	TDZ	Pitch		Dimensions in mm					NOF	PHDR	BSG	TCTR	THCHT
		mm	TPI	DMM	LU	THLGTH	LF	CZC					
MTH-M4X0.50ISO6HX-BC-P011	MF4X0.5	0,50	–	2,8	43,0	7,0	63,0	2.80X2.10	3	3,5	DIN374	6HX	C
MTH-M5X0.50ISO6HX-BC-P011	MF5X0.5	0,50	–	3,5	49,0	8,0	70,0	3.50X2.70	3	4,5	DIN374	6HX	C
MTH-M6X0.75ISO6HX-BC-P011	MF6X0.75	0,75	–	4,5	59,0	10,0	80,0	4.50X3.40	3	5,3	DIN374	6HX	C
MTH-M8X0.75ISO6HX-BC-P011	MF8X0.75	0,75	–	6,0	57,0	13,0	80,0	6.00X4.90	3	7,3	DIN374	6HX	C
MTH-M8X1.00ISO6HX-BC-P011	MF8X1.0	1,00	–	6,0	67,0	13,0	90,0	6.00X4.90	3	7,1	DIN374	6HX	C
MTH-M10X0.75ISO6HX-BC-P011	MF10X0.75	0,75	–	7,0	67,0	13,0	90,0	7.00X5.50	3	9,3	DIN374	6HX	C
MTH-M10X1.00ISO6HX-BC-P011	MF10X1.0	1,00	–	7,0	67,0	13,0	90,0	7.00X5.50	3	9,1	DIN374	6HX	C
MTH-M10X1.25ISO6HX-BC-P011	MF10X1.25	1,25	–	7,0	77,0	15,0	100,0	7.00X5.50	3	8,8	DIN374	6HX	C
MTH-M12X1.00ISO6HX-BC-P011	MF12X1.0	1,00	–	9,0	73,0	15,0	100,0	9.00X7.00	3	11,1	DIN374	6HX	C
MTH-M12X1.25ISO6HX-BC-P011	MF12X1.25	1,25	–	9,0	73,0	15,0	100,0	9.00X7.00	3	10,8	DIN374	6HX	C
MTH-M12X1.50ISO6HX-BC-P011	MF12X1.5	1,50	–	9,0	73,0	15,0	100,0	9.00X7.00	3	10,6	DIN374	6HX	C
MTH-M14X1.00ISO6HX-BC-P011	MF14X1.0	1,00	–	11,0	71,0	15,0	100,0	11.00X9.00	3	13,1	DIN374	6HX	C
MTH-M14X1.25ISO6HX-BC-P011	MF14X1.25	1,25	–	11,0	71,0	15,0	100,0	11.00X9.00	3	12,8	DIN374	6HX	C
MTH-M14X1.50ISO6HX-BC-P011	MF14X1.5	1,50	–	11,0	71,0	15,0	100,0	11.00X9.00	3	12,6	DIN374	6HX	C
MTH-M16X1.00ISO6HX-BC-P011	MF16X1.0	1,00	–	12,0	58,0	15,0	100,0	12.00X9.00	4	15,1	DIN374	6HX	C
MTH-M16X1.50ISO6HX-BC-P011	MF16X1.5	1,50	–	12,0	58,0	15,0	100,0	12.00X9.00	4	14,6	DIN374	6HX	C
MTH-M18X1.00ISO6HX-BC-P011	MF18X1.0	1,00	–	14,0	66,0	17,0	110,0	14.00X11.00	4	17,1	DIN374	6HX	C
MTH-M18X1.50ISO6HX-BC-P011	MF18X1.5	1,50	–	14,0	66,0	17,0	110,0	14.00X11.00	4	16,6	DIN374	6HX	C
MTH-M20X1.00ISO6HX-BC-P011	MF20X1.0	1,00	–	16,0	80,0	17,0	125,0	16.00X12.00	4	19,1	DIN374	6HX	C
MTH-M20X1.50ISO6HX-BC-P011	MF20X1.5	1,50	–	16,0	80,0	17,0	125,0	16.00X12.00	4	18,6	DIN374	6HX	C
MTH-M22X1.50ISO6HX-BC-P011	MF22X1.5	1,50	–	18,0	78,0	17,0	125,0	18.00X14.50	4	20,5	DIN374	6HX	C
MTH-M24X1.50ISO6HX-BC-P011	MF24X1.5	1,50	–	18,0	93,0	20,0	140,0	18.00X14.50	4	22,5	DIN374	6HX	C
MTH-M24X2.00ISO6HX-BC-P011	MF24X2.0	2,00	–	18,0	93,0	20,0	140,0	18.00X14.50	4	22,0	DIN374	6HX	C

Please check availability in current price and stock-list

MTH-P011

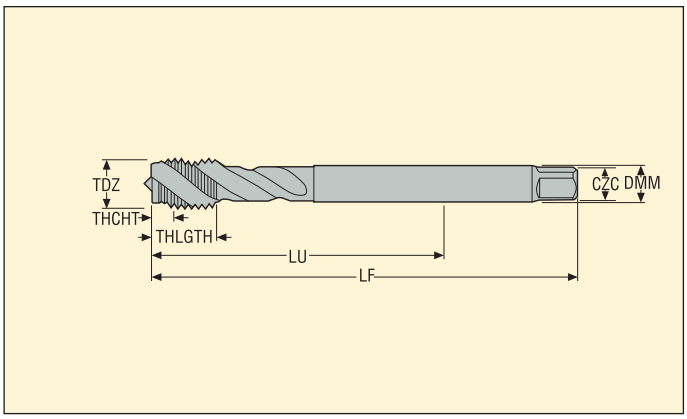

- For cutting data see page(s) 175
- Coating: AlTiN-based
- Substrate: HSS-E-PM

Designation	TDZ	Pitch		Dimensions in mm					NOF	PHDR	BSG	TCTR	THCHT
		mm	TPI	DMM	LU	THLGTH	LF	CZC					
MTH-M25X1.50ISO6HX-BC-P011	MF25X1.5	1,50	–	18,0	93,0	20,0	140,0	18.00X14.50	4	23,5	DIN374	6HX	C
MTH-M26X1.50ISO6HX-BC-P011	MF26X1.5	1,50	–	18,0	93,0	20,0	140,0	18.00X14.50	4	24,5	DIN374	6HX	C
MTH-M27X1.50ISO6HX-BC-P011	MF27X1.5	1,50	–	20,0	77,0	20,0	140,0	20.00X16.00	4	25,5	DIN374	6HX	C
MTH-M27X2.00ISO6HX-BC-P011	MF27X2.0	2,00	–	20,0	77,0	20,0	140,0	20.00X16.00	4	25,0	DIN374	6HX	C
MTH-M28X1.50ISO6HX-BC-P011	MF28X1.5	1,50	–	20,0	77,0	20,0	140,0	20.00X16.00	4	26,5	DIN374	6HX	C
MTH-M30X1.50ISO6HX-BC-P011	MF30X1.5	1,50	–	22,0	85,0	20,0	150,0	22.00X18.00	4	28,5	DIN374	6HX	C
MTH-M30X2.00ISO6HX-BC-P011	MF30X2.0	2,00	–	22,0	85,0	20,0	150,0	22.00X18.00	4	28,0	DIN374	6HX	C

Please check availability in current price and stock-list

MTP-P001

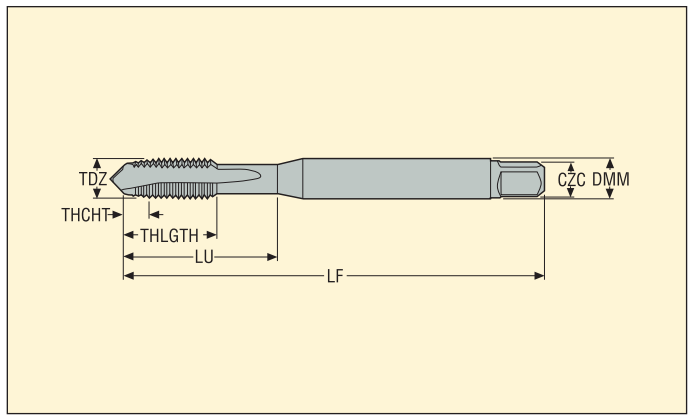

- For cutting data see page(s) 176
- Coating: TiAlN
- Substrate: HSS-E-PM

Designation	TDZ	Pitch		Dimensions in mm					NOF	PHDR	BSG	TCTR	THCHT
		mm	TPI	DMM	LU	THLGTH	LF	CZC					
MTP-M3X0.50ISO6H-TB-P001	M3	0,50	–	4,5	12,0	12,0	63,0	4.50X3.40	3	2,5	SECO-DIN	6H	B
MTP-M4X0.70ISO6H-TB-P001	M4	0,70	–	6,0	13,0	13,0	70,0	6.00X4.90	3	3,4	SECO-DIN	6H	B
MTP-M5X0.80ISO6H-TB-P001	M5	0,80	–	6,0	15,0	15,0	80,0	6.00X4.90	3	4,3	SECO-DIN	6H	B
MTP-M6X1.00ISO6H-TB-P001	M6	1,00	–	8,0	18,0	18,0	90,0	8.00X6.20	3	5,1	SECO-DIN	6H	B
MTP-M8X1.25ISO6H-TB-P001	M8	1,25	–	10,0	20,0	20,0	100,0	10.00X8.00	3	6,8	SECO-DIN	6H	B
MTP-M10X1.50ISO6H-TB-P001	M10	1,50	–	10,0	39,0	20,0	100,0	10.00X8.00	3	8,6	SECO-DIN	6H	B

Please check availability in current price and stock-list

MTP-P002

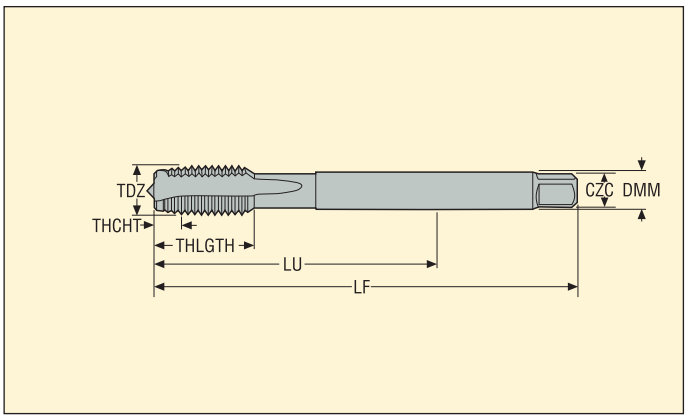

- For cutting data see page(s) 176
- Coating: TiAlN
- Substrate: HSS-E-PM

Designation	TDZ	Pitch		Dimensions in mm					NOF	PHDR	BSG	TCTR	THCHT
		mm	TPI	DMM	LU	THLGTH	LF	CZC					
MTP-M12X1.75ISO6H-TB-P002	M12	1,75	–	9,0	83,0	23,0	110,0	9.00X7.00	4	10,4	DIN376	6H	B
MTP-M14X2.00ISO6H-TB-P002	M14	2,00	–	11,0	81,0	25,0	110,0	11.00X9.00	4	12,1	DIN376	6H	B
MTP-M16X2.00ISO6H-TB-P002	M16	2,00	–	12,0	68,0	25,0	110,0	12.00X9.00	4	14,1	DIN376	6H	B
MTP-M18X2.50ISO6H-TB-P002	M18	2,50	–	14,0	81,0	30,0	125,0	14.00X11.00	4	15,7	DIN376	6H	B
MTP-M20X2.50ISO6H-TB-P002	M20	2,50	–	16,0	95,0	30,0	140,0	16.00X12.00	4	17,7	DIN376	6H	B

Please check availability in current price and stock-list

MTP-P003

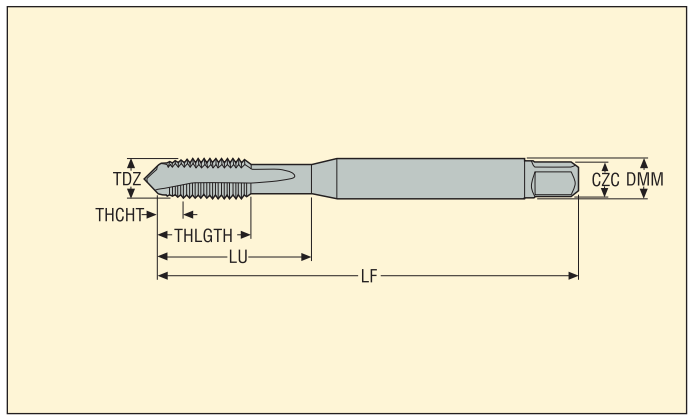

- For cutting data see page(s) 176
- Coating: AlTiN-based
- Substrate: HSS-E-PM

Designation	TDZ	Pitch		Dimensions in mm					NOF	PHDR	BSG	TCTR	THCHT
		mm	TPI	DMM	LU	THLGTH	LF	CZC					
MTP-M1X0.25ISO5HX-TB-P003	M1	0,25	–	2,5	20,0	5,0	40,0	2.50X2.10	2	0,75	DIN371	5HX	B
MTP-M1.2X0.25ISO5HX-TB-P003	M1.2	0,25	–	2,5	20,0	5,0	40,0	2.50X2.10	2	0,95	DIN371	5HX	B
MTP-M1.4X0.30ISO5HX-TB-P003	M1.4	0,30	–	2,5	20,0	6,5	40,0	2.50X2.10	2	1,1	DIN371	5HX	B
MTP-M1.6X0.35ISO6HX-TB-P003	M1.6	0,35	–	2,5	20,0	7,0	40,0	2.50X2.10	2	1,3	DIN371	6HX	B
MTP-M1.8X0.35ISO6HX-TB-P003	M1.8	0,35	–	2,5	20,0	7,0	40,0	2.50X2.10	2	1,5	DIN371	6HX	B
MTP-M2X0.40ISO6HX-TB-P003	M2	0,40	–	2,8	9,0	6,0	45,0	2.80X2.10	2	1,6	DIN371	6HX	B
MTP-M2.2X0.45ISO6HX-TB-P003	M2.2	0,45	–	2,8	12,0	7,0	45,0	2.80X2.10	2	1,8	DIN371	6HX	B
MTP-M2.3X0.40ISO6HX-TB-P003	M2.3	0,40	–	2,8	12,0	7,0	45,0	2.80X2.10	2	1,9	DIN371	6HX	B
MTP-M2.5X0.45ISO6HX-TB-P003	M2.5	0,45	–	2,8	12,5	8,0	50,0	2.80X2.10	2	2,1	DIN371	6HX	B
MTP-M2.6X0.45ISO6HX-TB-P003	M2.6	0,45	–	2,8	12,5	8,0	50,0	2.80X2.10	2	2,15	DIN371	6HX	B
MTP-M3X0.50ISO6HX-TB-P003	M3	0,50	–	3,5	18,0	8,9	56,0	3.50X2.70	3	2,5	DIN371	6HX	B
MTP-M3.5X0.60ISO6HX-TB-P003	M3.5	0,60	–	4,0	20,0	10,8	56,0	4.00X3.00	3	2,9	DIN371	6HX	B
MTP-M4X0.70ISO6HX-TB-P003	M4	0,70	–	4,5	21,0	11,7	63,0	4.50X3.40	3	3,4	DIN371	6HX	B
MTP-M5X0.80ISO6HX-TB-P003	M5	0,80	–	6,0	25,0	12,6	70,0	6.00X4.90	3	4,3	DIN371	6HX	B
MTP-M6X1.00ISO6HX-TB-P003	M6	1,00	–	6,0	30,0	14,5	80,0	6.00X4.90	3	5,1	DIN371	6HX	B
MTP-M7X1.00ISO6HX-TB-P003	M7	1,00	–	7,0	30,0	14,5	80,0	7.00X5.50	3	6,1	DIN371	6HX	B
MTP-M8X1.25ISO6HX-TB-P003	M8	1,25	–	8,0	35,0	17,4	90,0	8.00X6.20	3	6,8	DIN371	6HX	B
MTP-M10X1.50ISO6HX-TB-P003	M10	1,50	–	10,0	39,0	19,2	100,0	10.00X8.00	3	8,6	DIN371	6HX	B

Please check availability in current price and stock-list

MTP-P003-A

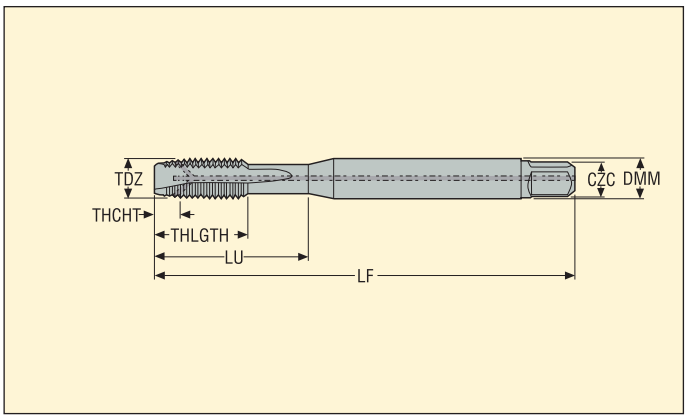

- For cutting data see page(s) 176
- Coating: AlTiN-based
- Substrate: HSS-E-PM
- Internal coolant

Designation	TDZ	Pitch		Dimensions in mm					NOF	PHDR	BSG	TCTR	THCHT
		mm	TPI	DMM	LU	THLGTH	LF	CZC					
MTP-M4X0.70ISO6HX-TB-P003-A	M4	0,70	–	4,5	21,0	11,7	63,0	4.50X3.40	3	3,4	DIN371	6HX	B
MTP-M5X0.80ISO6HX-TB-P003-A	M5	0,80	–	6,0	25,0	12,6	70,0	6.00X4.90	3	4,3	DIN371	6HX	B
MTP-M6X1.00ISO6HX-TB-P003-A	M6	1,00	–	6,0	30,0	14,5	80,0	6.00X4.90	3	5,1	DIN371	6HX	B
MTP-M7X1.00ISO6HX-TB-P003-A	M7	1,00	–	7,0	30,0	14,5	80,0	7.00X5.50	3	6,1	DIN371	6HX	B
MTP-M8X1.25ISO6HX-TB-P003-A	M8	1,25	–	8,0	35,0	17,4	90,0	8.00X6.20	3	6,8	DIN371	6HX	B
MTP-M10X1.50ISO6HX-TB-P003-A	M10	1,50	–	10,0	39,0	19,2	100,0	10.00X8.00	3	8,6	DIN371	6HX	B

Please check availability in current price and stock-list

MTP-P004

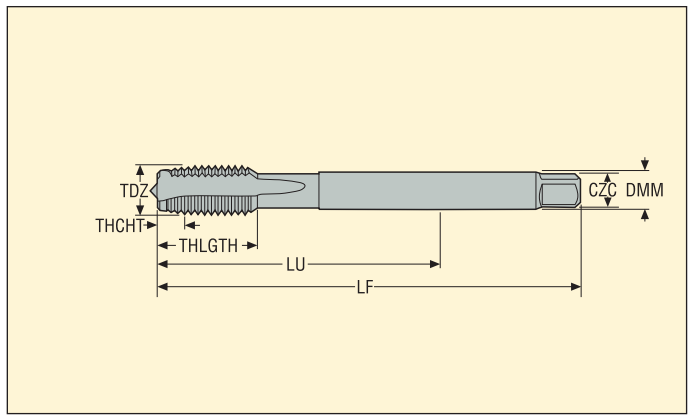

- For cutting data see page(s) 176
- Coating: AlTiN-based
- Substrate: HSS-E-PM

Designation	TDZ	Pitch		Dimensions in mm					NOF	PHDR	BSG	TCTR	THCHT
		mm	TPI	DMM	LU	THLGTH	LF	CZC					
MTP-M4X0.70ISO6HX-TB-P004	M4	0,70	–	2,8	43,0	12,0	63,0	2.80X2.10	3	3,4	DIN376	6HX	B
MTP-M5X0.80ISO6HX-TB-P004	M5	0,80	–	3,5	49,0	13,2	70,0	3.50X2.70	3	4,3	DIN376	6HX	B
MTP-M6X1.00ISO6HX-TB-P004	M6	1,00	–	4,5	59,0	15,1	80,0	4.50X3.40	3	5,1	DIN376	6HX	B
MTP-M8X1.25ISO6HX-TB-P004	M8	1,25	–	6,0	67,0	18,0	90,0	6.00X4.90	3	6,8	DIN376	6HX	B
MTP-M10X1.50ISO6HX-TB-P004	M10	1,50	–	7,0	77,0	19,8	100,0	7.00X5.50	3	8,6	DIN376	6HX	B
MTP-M12X1.75ISO6HX-TB-P004	M12	1,75	–	9,0	83,0	23,0	110,0	9.00X7.00	4	10,4	DIN376	6HX	B
MTP-M14X2.00ISO6HX-TB-P004	M14	2,00	–	11,0	81,0	25,0	110,0	11.00X9.00	4	12,1	DIN376	6HX	B
MTP-M16X2.00ISO6HX-TB-P004	M16	2,00	–	12,0	68,0	25,0	110,0	12.00X9.00	4	14,1	DIN376	6HX	B
MTP-M18X2.50ISO6HX-TB-P004	M18	2,50	–	14,0	81,0	30,0	125,0	14.00X11.00	4	15,7	DIN376	6HX	B
MTP-M20X2.50ISO6HX-TB-P004	M20	2,50	–	16,0	95,0	30,0	140,0	16.00X12.00	4	17,7	DIN376	6HX	B
MTP-M22X2.50ISO6HX-TB-P004	M22	2,50	–	18,0	93,0	34,0	140,0	18.00X14.50	4	19,7	DIN376	6HX	B
MTP-M24X3.00ISO6HX-TB-P004	M24	3,00	–	18,0	113,0	38,0	160,0	18.00X14.50	4	21,0	DIN376	6HX	B
MTP-M27X3.00ISO6HX-TB-P004	M27	3,00	–	20,0	97,0	38,0	160,0	20.00X16.00	4	24,0	DIN376	6HX	B
MTP-M30X3.50ISO6HX-TB-P004	M30	3,50	–	22,0	115,0	45,0	180,0	22.00X18.00	4	26,5	DIN376	6HX	B

Please check availability in current price and stock-list

MTP-P004-A

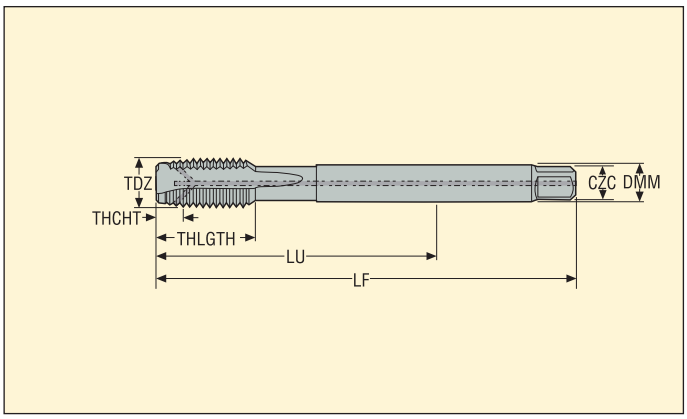

- For cutting data see page(s) 176
- Coating: AlTiN-based
- Substrate: HSS-E-PM
- Internal coolant

Designation	TDZ	Pitch		Dimensions in mm					NOF	PHDR	BSG	TCTR	THCHT
		mm	TPI	DMM	LU	THLGTH	LF	CZC					
MTP-M12X1.75ISO6HX-TB-P004-A	M12	1,75	–	9,0	83,0	23,0	110,0	9.00X7.00	4	10,4	DIN376	6HX	B
MTP-M14X2.00ISO6HX-TB-P004-A	M14	2,00	–	11,0	81,0	25,0	110,0	11.00X9.00	4	12,1	DIN376	6HX	B
MTP-M16X2.00ISO6HX-TB-P004-A	M16	2,00	–	12,0	68,0	25,0	110,0	12.00X9.00	4	14,1	DIN376	6HX	B
MTP-M18X2.50ISO6HX-TB-P004-A	M18	2,50	–	14,0	81,0	30,0	125,0	14.00X11.00	4	15,7	DIN376	6HX	B
MTP-M20X2.50ISO6HX-TB-P004-A	M20	2,50	–	16,0	95,0	30,0	140,0	16.00X12.00	4	17,7	DIN376	6HX	B
MTP-M22X2.50ISO6HX-TB-P004-A	M22	2,50	–	18,0	93,0	34,0	140,0	18.00X14.50	4	19,7	DIN376	6HX	B
MTP-M24X3.00ISO6HX-TB-P004-A	M24	3,00	–	18,0	113,0	38,0	160,0	18.00X14.50	4	21,0	DIN376	6HX	B
MTP-M27X3.00ISO6HX-TB-P004-A	M27	3,00	–	20,0	97,0	38,0	160,0	20.00X16.00	4	24,0	DIN376	6HX	B
MTP-M30X3.50ISO6HX-TB-P004-A	M30	3,50	–	22,0	115,0	45,0	180,0	22.00X18.00	4	26,5	DIN376	6HX	B

Please check availability in current price and stock-list

MTP-P011

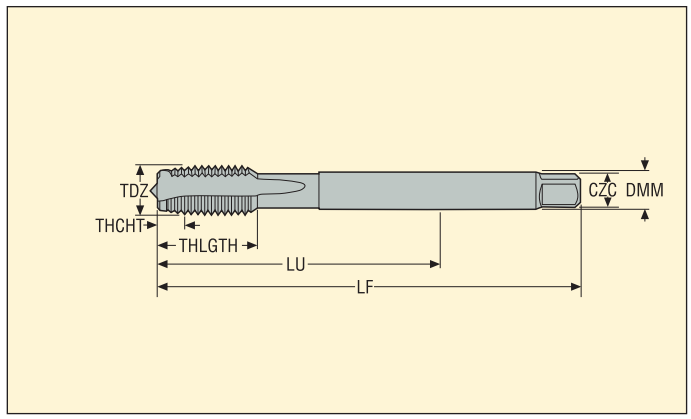

- For cutting data see page(s) 176
- Coating: AlTiN-based
- Substrate: HSS-E-PM

Designation	TDZ	Pitch		Dimensions in mm					NOF	PHDR	BSG	TCTR	THCHT
		mm	TPI	DMM	LU	THLGTH	LF	CZC					
MTP-M4X0.50ISO6HX-TB-P011	MF4X0.5	0,50	–	2,8	43,0	12,0	63,0	2.80X2.10	3	3,5	DIN374	6HX	B
MTP-M5X0.50ISO6HX-TB-P011	MF5X0.5	0,50	–	3,5	49,0	13,0	70,0	3.50X2.70	3	4,5	DIN374	6HX	B
MTP-M6X0.75ISO6HX-TB-P011	MF6X0.75	0,75	–	4,5	59,0	15,0	80,0	4.50X3.40	3	5,3	DIN374	6HX	B
MTP-M8X0.75ISO6HX-TB-P011	MF8X0.75	0,75	–	6,0	57,0	15,0	80,0	6.00X4.90	3	7,3	DIN374	6HX	B
MTP-M8X1.00ISO6HX-TB-P011	MF8X1.0	1,00	–	6,0	67,0	18,0	90,0	6.00X4.90	3	7,1	DIN374	6HX	B
MTP-M10X0.75ISO6HX-TB-P011	MF10X0.75	0,75	–	7,0	67,0	17,6	90,0	7.00X5.50	3	9,3	DIN374	6HX	B
MTP-M10X1.00ISO6HX-TB-P011	MF10X1.0	1,00	–	7,0	67,0	17,6	90,0	7.00X5.50	3	9,1	DIN374	6HX	B
MTP-M10X1.25ISO6HX-TB-P011	MF10X1.25	1,25	–	7,0	77,0	19,8	100,0	7.00X5.50	3	8,8	DIN374	6HX	B
MTP-M12X1.00ISO6HX-TB-P011	MF12X1.0	1,00	–	9,0	73,0	21,0	100,0	9.00X7.00	4	11,1	DIN374	6HX	B
MTP-M12X1.25ISO6HX-TB-P011	MF12X1.25	1,25	–	9,0	73,0	21,0	100,0	9.00X7.00	4	10,8	DIN374	6HX	B
MTP-M12X1.50ISO6HX-TB-P011	MF12X1.5	1,50	–	9,0	73,0	21,0	100,0	9.00X7.00	4	10,6	DIN374	6HX	B
MTP-M14X1.00ISO6HX-TB-P011	MF14X1.0	1,00	–	11,0	71,0	21,0	100,0	11.00X9.00	4	13,1	DIN374	6HX	B
MTP-M14X1.25ISO6HX-TB-P011	MF14X1.25	1,25	–	11,0	71,0	21,0	100,0	11.00X9.00	4	12,8	DIN374	6HX	B
MTP-M14X1.50ISO6HX-TB-P011	MF14X1.5	1,50	–	11,0	71,0	21,0	100,0	11.00X9.00	4	12,6	DIN374	6HX	B
MTP-M16X1.00ISO6HX-TB-P011	MF16X1.0	1,00	–	12,0	58,0	21,0	100,0	12.00X9.00	4	15,1	DIN374	6HX	B
MTP-M16X1.50ISO6HX-TB-P011	MF16X1.5	1,50	–	12,0	58,0	21,0	100,0	12.00X9.00	4	14,6	DIN374	6HX	B
MTP-M18X1.00ISO6HX-TB-P011	MF18X1.0	1,00	–	14,0	66,0	24,0	110,0	14.00X11.00	4	17,1	DIN374	6HX	B
MTP-M18X1.50ISO6HX-TB-P011	MF18X1.5	1,50	–	14,0	66,0	24,0	110,0	14.00X11.00	4	16,6	DIN374	6HX	B
MTP-M20X1.00ISO6HX-TB-P011	MF20X1.0	1,00	–	16,0	80,0	24,0	125,0	16.00X12.00	4	19,1	DIN374	6HX	B
MTP-M20X1.50ISO6HX-TB-P011	MF20X1.5	1,50	–	16,0	80,0	24,0	125,0	16.00X12.00	4	18,6	DIN374	6HX	B
MTP-M22X1.50ISO6HX-TB-P011	MF22X1.5	1,50	–	18,0	78,0	25,0	125,0	18.00X14.50	4	20,5	DIN374	6HX	B
MTP-M24X1.50ISO6HX-TB-P011	MF24X1.5	1,50	–	18,0	93,0	28,0	140,0	18.00X14.50	4	22,5	DIN374	6HX	B
MTP-M24X2.00ISO6HX-TB-P011	MF24X2.0	2,00	–	18,0	93,0	28,0	140,0	18.00X14.50	4	22,0	DIN374	6HX	B

Please check availability in current price and stock-list

MTP-P011

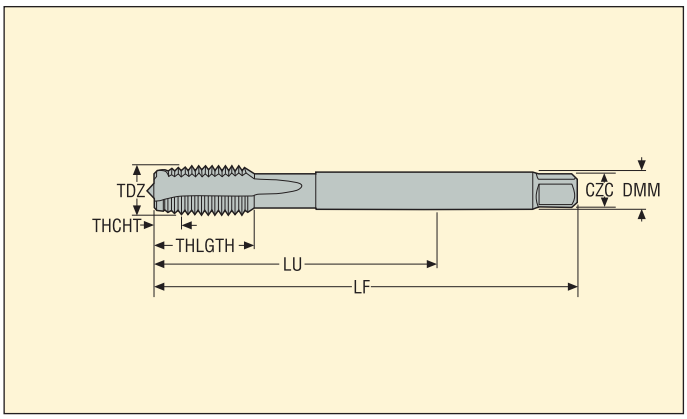

- For cutting data see page(s) 176
- Coating: AlTiN-based
- Substrate: HSS-E-PM

Designation	TDZ	Pitch		Dimensions in mm					NOF	PHDR	BSG	TCTR	THCHT
		mm	TPI	DMM	LU	THLGTH	LF	CZC					
MTP-M25X1.50ISO6HX-TB-P011	MF25X1.5	1,50	–	18,0	93,0	28,0	140,0	18.00X14.50	4	23,5	DIN374	6HX	B
MTP-M26X1.50ISO6HX-TB-P011	MF26X1.5	1,50	–	18,0	93,0	28,0	140,0	18.00X14.50	4	24,5	DIN374	6HX	B
MTP-M27X1.50ISO6HX-TB-P011	MF27X1.5	1,50	–	20,0	77,0	28,0	140,0	20.00X16.00	4	25,5	DIN374	6HX	B
MTP-M27X2.00ISO6HX-TB-P011	MF27X2.0	2,00	–	20,0	77,0	28,0	140,0	20.00X16.00	4	25,0	DIN374	6HX	B
MTP-M28X1.50ISO6HX-TB-P011	MF28X1.5	1,50	–	20,0	77,0	28,0	140,0	20.00X16.00	4	26,5	DIN374	6HX	B
MTP-M30X1.50ISO6HX-TB-P011	MF30X1.5	1,50	–	22,0	85,0	28,0	150,0	22.00X18.00	4	28,5	DIN374	6HX	B
MTP-M30X2.00ISO6HX-TB-P011	MF30X2.0	2,00	–	22,0	85,0	28,0	150,0	22.00X18.00	4	28,0	DIN374	6HX	B

Please check availability in current price and stock-list

MTH-M003

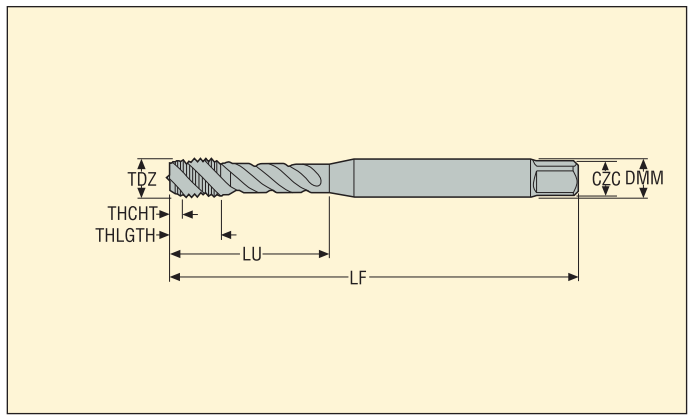

- For cutting data see page(s) 177
- Coating: TiCN
- Substrate: HSS-E

Designation	TDZ	Pitch		Dimensions in mm					NOF	PHDR	BSG	TCTR	THCHT
		mm	TPI	DMM	LU	THLGTH	LF	CZC					
MTH-M1.6X0.35ISO6H-BC-M003	M1.6	0,35	–	2,5	6,0	4,0	40,0	2.50X2.10	2	1,3	DIN371	6H	C
MTH-M2X0.40ISO6H-BC-M003	M2	0,40	–	2,8	9,0	4,0	45,0	2.80X2.10	3	1,6	DIN371	6H	C
MTH-M2.2X0.45ISO6H-BC-M003	M2.2	0,45	–	2,8	12,0	4,0	45,0	2.80X2.10	3	1,8	DIN371	6H	C
MTH-M2.3X0.40ISO6H-BC-M003	M2.3	0,40	–	2,8	12,0	4,0	45,0	2.80X2.10	3	1,9	DIN371	6H	C
MTH-M2.5X0.45ISO6H-BC-M003	M2.5	0,45	–	2,8	12,5	4,0	50,0	2.80X2.10	3	2,1	DIN371	6H	C
MTH-M2.6X0.45ISO6H-BC-M003	M2.6	0,45	–	2,8	12,5	4,0	50,0	2.80X2.10	3	2,15	DIN371	6H	C
MTH-M3X0.50ISO6H-BC-M003	M3	0,50	–	3,5	18,0	5,9	56,0	3.50X2.70	3	2,5	DIN371	6H	C
MTH-M3.5X0.60ISO6H-BC-M003	M3.5	0,60	–	4,0	20,0	7,0	56,0	4.00X3.00	3	2,9	DIN371	6H	C
MTH-M4X0.70ISO6H-BC-M003	M4	0,70	–	4,5	21,0	6,7	63,0	4.50X3.40	3	3,4	DIN371	6H	C
MTH-M5X0.80ISO6H-BC-M003	M5	0,80	–	6,0	25,0	7,7	70,0	6.00X4.90	3	4,3	DIN371	6H	C
MTH-M6X1.00ISO6H-BC-M003	M6	1,00	–	6,0	30,0	10,0	80,0	6.00X4.90	3	5,1	DIN371	6H	C
MTH-M7X1.00ISO6H-BC-M003	M7	1,00	–	7,0	30,0	10,0	80,0	7.00X5.50	3	6,1	DIN371	6H	C
MTH-M8X1.25ISO6H-BC-M003	M8	1,25	–	8,0	35,0	11,6	90,0	8.00X6.20	3	6,8	DIN371	6H	C
MTH-M10X1.50ISO6H-BC-M003	M10	1,50	–	10,0	39,0	15,1	100,0	10.00X8.00	3	8,6	DIN371	6H	C

Please check availability in current price and stock-list

MTH-M003-A

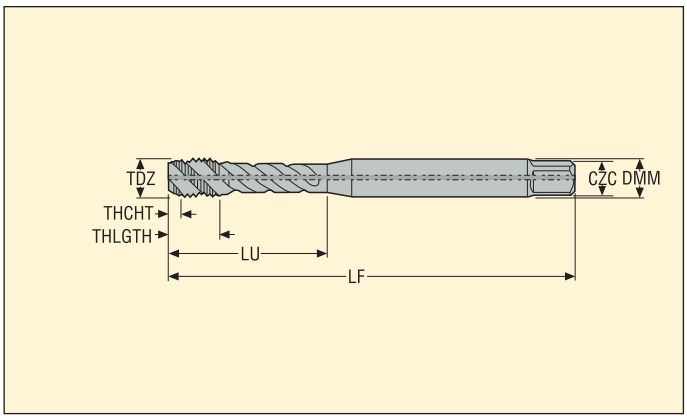

- For cutting data see page(s) 177
- Coating: TiCN
- Substrate: HSS-E
- Internal coolant

Designation	TDZ	Pitch		Dimensions in mm					NOF	PHDR	BSG	TCTR	THCHT
		mm	TPI	DMM	LU	THLGTH	LF	CZC					
MTH-M4X0.70ISO6H-BC-M003-A	M4	0,70	–	4,5	21,0	6,7	63,0	4.50X3.40	3	3,4	DIN371	6H	C
MTH-M5X0.80ISO6H-BC-M003-A	M5	0,80	–	6,0	25,0	7,7	70,0	6.00X4.90	3	4,3	DIN371	6H	C
MTH-M6X1.00ISO6H-BC-M003-A	M6	1,00	–	6,0	30,0	10,0	80,0	6.00X4.90	3	5,1	DIN371	6H	C
MTH-M7X1.00ISO6H-BC-M003-A	M7	1,00	–	7,0	30,0	10,0	80,0	7.00X5.50	3	6,1	DIN371	6H	C
MTH-M8X1.25ISO6H-BC-M003-A	M8	1,25	–	8,0	35,0	11,6	90,0	8.00X6.20	3	6,8	DIN371	6H	C
MTH-M10X1.50ISO6H-BC-M003-A	M10	1,50	–	10,0	39,0	15,1	100,0	10.00X8.00	3	8,6	DIN371	6H	C

Please check availability in current price and stock-list

MTH-M004

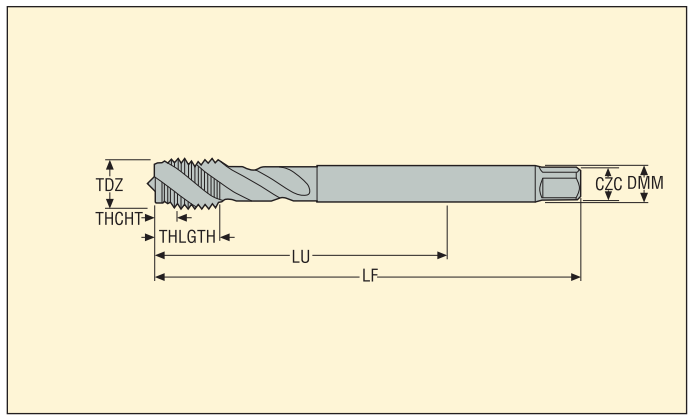

- For cutting data see page(s) 177
- Coating: TiCN
- Substrate: HSS-E

Designation	TDZ	Pitch		Dimensions in mm					NOF	PHDR	BSG	TCTR	THCHT
		mm	TPI	DMM	LU	THLGTH	LF	CZC					
MTH-M12X1.75ISO6H-BC-M004	M12	1,75	–	9,0	83,0	23,0	110,0	9.00X7.00	3	10,4	DIN376	6H	C
MTH-M14X2.00ISO6H-BC-M004	M14	2,00	–	11,0	81,0	25,0	110,0	11.00X9.00	3	12,1	DIN376	6H	C
MTH-M16X2.00ISO6H-BC-M004	M16	2,00	–	12,0	68,0	20,0	110,0	12.00X9.00	4	14,1	DIN376	6H	C
MTH-M18X2.50ISO6H-BC-M004	M18	2,50	–	14,0	81,0	25,0	125,0	14.00X11.00	4	15,7	DIN376	6H	C
MTH-M20X2.50ISO6H-BC-M004	M20	2,50	–	16,0	95,0	25,0	140,0	16.00X12.00	4	17,7	DIN376	6H	C

Please check availability in current price and stock-list

MTH-M004-A

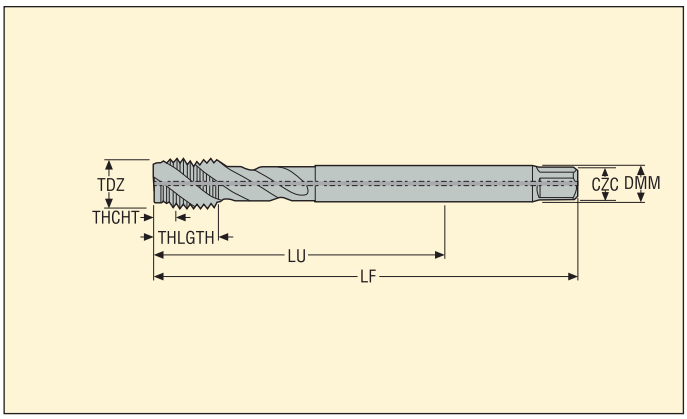

- For cutting data see page(s) 177
- Coating: TiCN
- Substrate: HSS-E
- Internal coolant

Designation	TDZ	Pitch		Dimensions in mm					NOF	PHDR	BSG	TCTR	THCHT
		mm	TPI	DMM	LU	THLGTH	LF	CZC					
MTH-M12X1.75ISO6H-BC-M004-A	M12	1,75	–	9,0	83,0	23,0	110,0	9.00X7.00	3	10,4	DIN376	6H	C
MTH-M14X2.00ISO6H-BC-M004-A	M14	2,00	–	11,0	81,0	25,0	110,0	11.00X9.00	3	12,1	DIN376	6H	C
MTH-M16X2.00ISO6H-BC-M004-A	M16	2,00	–	12,0	68,0	20,0	110,0	12.00X9.00	4	14,1	DIN376	6H	C
MTH-M18X2.50ISO6H-BC-M004-A	M18	2,50	–	14,0	81,0	25,0	125,0	14.00X11.00	4	15,7	DIN376	6H	C
MTH-M20X2.50ISO6H-BC-M004-A	M20	2,50	–	16,0	95,0	25,0	140,0	16.00X12.00	4	17,7	DIN376	6H	C

Please check availability in current price and stock-list

MTP-M003

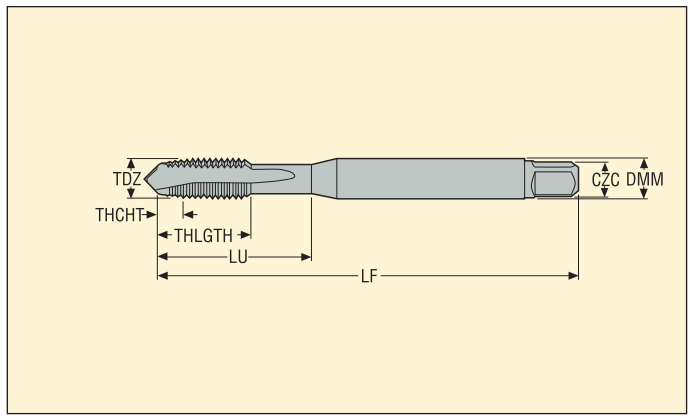

- For cutting data see page(s) 177
- Coating: TiCN
- Substrate: HSS-E

Designation	TDZ	Pitch		Dimensions in mm					NOF	PHDR	BSG	TCTR	THCHT
		mm	TPI	DMM	LU	THLGTH	LF	CZC					
MTP-M1X0.25ISO5HX-TB-M003	M1	0,25	–	2,5	20,0	5,0	40,0	2.50X2.10	2	0,75	DIN371	5HX	B
MTP-M1.2X0.25ISO5HX-TB-M003	M1.2	0,25	–	2,5	20,0	5,0	40,0	2.50X2.10	2	0,95	DIN371	5HX	B
MTP-M1.4X0.30ISO5HX-TB-M003	M1.4	0,30	–	2,5	20,0	6,5	40,0	2.50X2.10	2	1,1	DIN371	5HX	B
MTP-M1.6X0.35ISO6H-TB-M003	M1.6	0,35	–	2,5	20,0	7,0	40,0	2.50X2.10	2	1,3	DIN371	6H	B
MTP-M1.8X0.35ISO6H-TB-M003	M1.8	0,35	–	2,5	20,0	7,0	40,0	2.50X2.10	2	1,5	DIN371	6H	B
MTP-M2X0.40ISO6H-TB-M003	M2	0,40	–	2,8	9,0	6,0	45,0	2.80X2.10	2	1,6	DIN371	6H	B
MTP-M2.2X0.45ISO6H-TB-M003	M2.2	0,45	–	2,8	12,0	7,0	45,0	2.80X2.10	2	1,8	DIN371	6H	B
MTP-M2.3X0.40ISO6H-TB-M003	M2.3	0,40	–	2,8	12,0	7,0	45,0	2.80X2.10	2	1,9	DIN371	6H	B
MTP-M2.5X0.45ISO6H-TB-M003	M2.5	0,45	–	2,8	12,5	8,0	50,0	2.80X2.10	2	2,1	DIN371	6H	B
MTP-M2.6X0.45ISO6H-TB-M003	M2.6	0,45	–	2,8	12,5	8,0	50,0	2.80X2.10	2	2,15	DIN371	6H	B
MTP-M3X0.50ISO6H-TB-M003	M3	0,50	–	3,5	18,0	8,9	56,0	3.50X2.70	3	2,5	DIN371	6H	B
MTP-M3.5X0.60ISO6H-TB-M003	M3.5	0,60	–	4,0	20,0	10,8	56,0	4.00X3.00	3	2,9	DIN371	6H	B
MTP-M4X0.70ISO6H-TB-M003	M4	0,70	–	4,5	21,0	11,7	63,0	4.50X3.40	3	3,4	DIN371	6H	B
MTP-M5X0.80ISO6H-TB-M003	M5	0,80	–	6,0	25,0	12,6	70,0	6.00X4.90	3	4,3	DIN371	6H	B
MTP-M6X1.00ISO6H-TB-M003	M6	1,00	–	6,0	30,0	14,5	80,0	6.00X4.90	3	5,1	DIN371	6H	B
MTP-M8X1.25ISO6H-TB-M003	M8	1,25	–	8,0	35,0	17,4	90,0	8.00X6.20	3	6,8	DIN371	6H	B
MTP-M10X1.50ISO6H-TB-M003	M10	1,50	–	10,0	39,0	19,2	100,0	10.00X8.00	3	8,6	DIN371	6H	B

Please check availability in current price and stock-list

MTP-M003-A

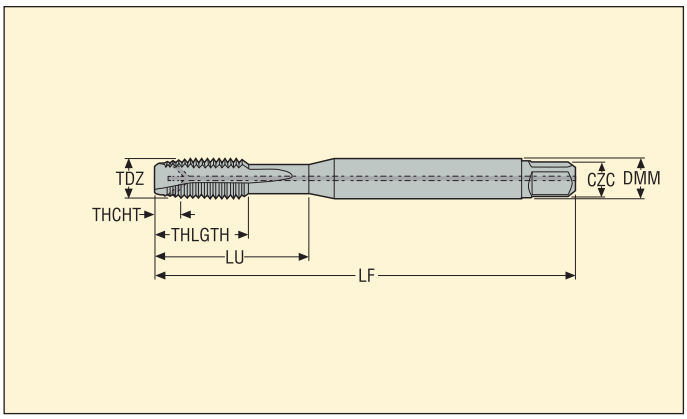

- For cutting data see page(s) 177
- Coating: TiCN
- Substrate: HSS-E
- Internal coolant

Designation	TDZ	Pitch		Dimensions in mm					NOF	PHDR	BSG	TCTR	THCHT
		mm	TPI	DMM	LU	THLGTH	LF	CZC					
MTP-M4X0.70ISO6H-TB-M003-A	M4	0,70	–	4,5	21,0	11,7	63,0	4.50X3.40	3	3,4	DIN371	6H	B
MTP-M5X0.80ISO6H-TB-M003-A	M5	0,80	–	6,0	25,0	12,6	70,0	6.00X4.90	3	4,3	DIN371	6H	B
MTP-M6X1.00ISO6H-TB-M003-A	M6	1,00	–	6,0	30,0	14,5	80,0	6.00X4.90	3	5,1	DIN371	6H	B
MTP-M8X1.25ISO6H-TB-M003-A	M8	1,25	–	8,0	35,0	17,4	90,0	8.00X6.20	3	6,8	DIN371	6H	B
MTP-M10X1.50ISO6H-TB-M003-A	M10	1,50	–	10,0	39,0	19,2	100,0	10.00X8.00	3	8,6	DIN371	6H	B

Please check availability in current price and stock-list

MTP-M004

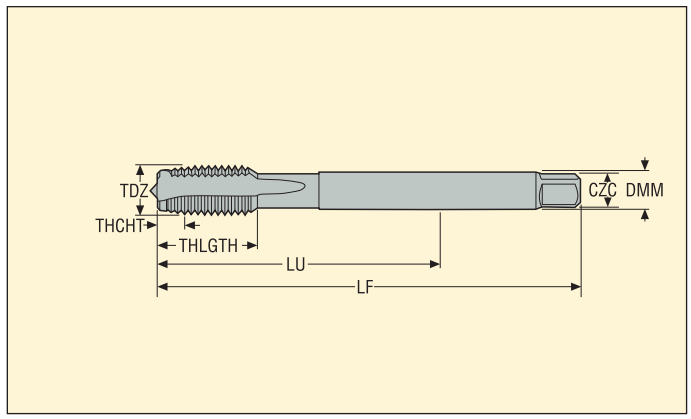

- For cutting data see page(s) 177
- Coating: TiCN
- Substrate: HSS-E

Designation	TDZ	Pitch		Dimensions in mm					NOF	PHDR	BSG	TCTR	THCHT
		mm	TPI	DMM	LU	THLGTH	LF	CZC					
MTP-M12X1.75ISO6H-TB-M004	M12	1,75	–	9,0	83,0	23,0	110,0	9.00X7.00	4	10,4	DIN376	6H	B
MTP-M14X2.00ISO6H-TB-M004	M14	2,00	–	11,0	81,0	25,0	110,0	11.00X9.00	4	12,1	DIN376	6H	B
MTP-M16X2.00ISO6H-TB-M004	M16	2,00	–	12,0	68,0	25,0	110,0	12.00X9.00	4	14,1	DIN376	6H	B
MTP-M18X2.50ISO6H-TB-M004	M18	2,50	–	14,0	81,0	30,0	125,0	14.00X11.00	4	15,7	DIN376	6H	B
MTP-M20X2.50ISO6H-TB-M004	M20	2,50	–	16,0	95,0	30,0	140,0	16.00X12.00	4	17,7	DIN376	6H	B

Please check availability in current price and stock-list

MTP-M004-A

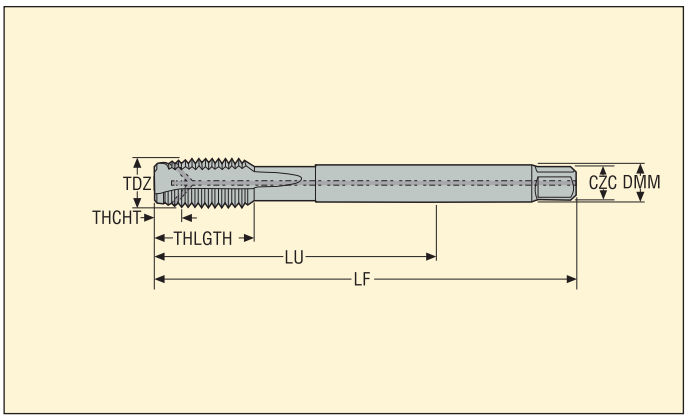

- For cutting data see page(s) 177
- Coating: TiCN
- Substrate: HSS-E
- Internal coolant

Designation	TDZ	Pitch		Dimensions in mm					NOF	PHDR	BSG	TCTR	THCHT
		mm	TPI	DMM	LU	THLGTH	LF	CZC					
MTP-M12X1.75ISO6H-TB-M004-A	M12	1,75	–	9,0	83,0	23,0	110,0	9.00X7.00	4	10,4	DIN376	6H	B
MTP-M14X2.00ISO6H-TB-M004-A	M14	2,00	–	11,0	81,0	25,0	110,0	11.00X9.00	4	12,1	DIN376	6H	B
MTP-M16X2.00ISO6H-TB-M004-A	M16	2,00	–	12,0	68,0	25,0	110,0	12.00X9.00	4	14,1	DIN376	6H	B
MTP-M18X2.50ISO6H-TB-M004-A	M18	2,50	–	14,0	81,0	30,0	125,0	14.00X11.00	4	15,7	DIN376	6H	B
MTP-M20X2.50ISO6H-TB-M004-A	M20	2,50	–	16,0	95,0	30,0	140,0	16.00X12.00	4	17,7	DIN376	6H	B
MTP-M22X2.50ISO6H-TB-M004-A	M22	2,50	–	18,0	93,0	34,0	140,0	18.00X14.50	4	19,7	DIN376	6H	B
MTP-M24X3.00ISO6H-TB-M004-A	M24	3,00	–	18,0	113,0	38,0	160,0	18.00X14.50	4	21,0	DIN376	6H	B

Please check availability in current price and stock-list

MTS-K001

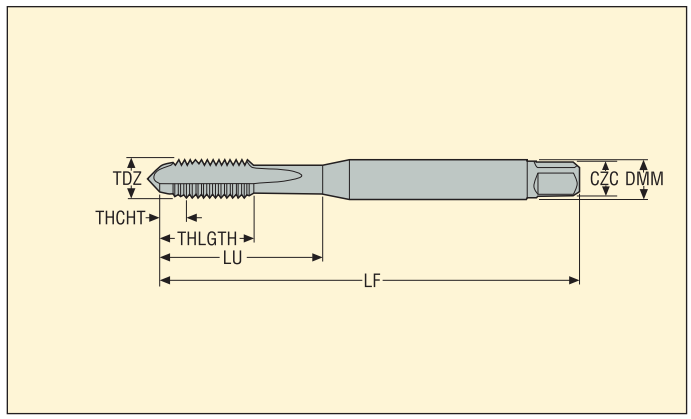

- For cutting data see page(s) 178
- Coating: TiAlN
- Substrate: HSS-E-PM

Designation	TDZ	Pitch		Dimensions in mm					NOF	PHDR	BSG	TCTR	THCHT
		mm	TPI	DMM	LU	THLGTH	LF	CZC					
MTS-M3X0.50ISO6HX-XC-K001	M3	0,50	–	3,5	18,0	8,9	56,0	3.50X2.70	3	2,5	DIN371	6HX	C
MTS-M4X0.70ISO6HX-XC-K001	M4	0,70	–	4,5	21,0	11,7	63,0	4.50X3.40	4	3,4	DIN371	6HX	C
MTS-M5X0.80ISO6HX-XC-K001	M5	0,80	–	6,0	25,0	12,6	70,0	6.00X4.90	4	4,3	DIN371	6HX	C
MTS-M6X1.00ISO6HX-XC-K001	M6	1,00	–	6,0	30,0	14,5	80,0	6.00X4.90	4	5,1	DIN371	6HX	C
MTS-M8X1.25ISO6HX-XC-K001	M8	1,25	–	8,0	35,0	18,1	90,0	8.00X6.20	4	6,8	DIN371	6HX	C
MTS-M10X1.50ISO6HX-XC-K001	M10	1,50	–	10,0	39,0	20,1	100,0	10.00X8.00	4	8,6	DIN371	6HX	C

Please check availability in current price and stock-list

MTS-K001-A

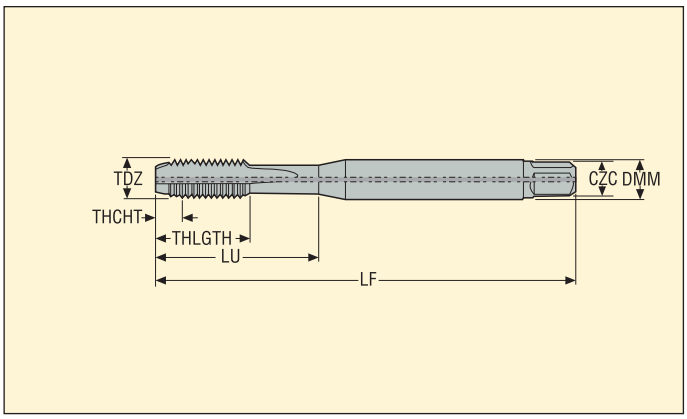

- For cutting data see page(s) 178
- Coating: TiAlN
- Substrate: HSS-E-PM
- Internal coolant

Designation	TDZ	Pitch		Dimensions in mm					NOF	PHDR	BSG	TCTR	THCHT
		mm	TPI	DMM	LU	THLGTH	LF	CZC					
MTS-M4X0.70ISO6HX-XC-K001-A	M4	0,70	–	4,5	21,0	11,7	63,0	4.50X3.40	4	3,4	DIN371	6HX	C
MTS-M5X0.80ISO6HX-XC-K001-A	M5	0,80	–	6,0	25,0	12,6	70,0	6.00X4.90	4	4,3	DIN371	6HX	C
MTS-M5X0.80ISO6HX-XE-K001-A	M5	0,80	–	6,0	25,0	12,6	70,0	6.00X4.90	4	4,3	DIN371	6HX	E
MTS-M6X1.00ISO6HX-XC-K001-A	M6	1,00	–	6,0	30,0	14,5	80,0	6.00X4.90	4	5,1	DIN371	6HX	C
MTS-M6X1.00ISO6HX-XE-K001-A	M6	1,00	–	6,0	30,0	14,5	80,0	6.00X4.90	4	5,1	DIN371	6HX	E
MTS-M8X1.25ISO6HX-XC-K001-A	M8	1,25	–	8,0	35,0	18,1	90,0	8.00X6.20	4	6,8	DIN371	6HX	C
MTS-M8X1.25ISO6HX-XE-K001-A	M8	1,25	–	8,0	35,0	18,1	90,0	8.00X6.20	4	6,8	DIN371	6HX	E
MTS-M10X1.50ISO6HX-XC-K001-A	M10	1,50	–	10,0	39,0	20,1	100,0	10.00X8.00	4	8,6	DIN371	6HX	C
MTS-M10X1.50ISO6HX-XE-K001-A	M10	1,50	–	10,0	39,0	20,1	100,0	10.00X8.00	4	8,6	DIN371	6HX	E

Please check availability in current price and stock-list

MTS-K002

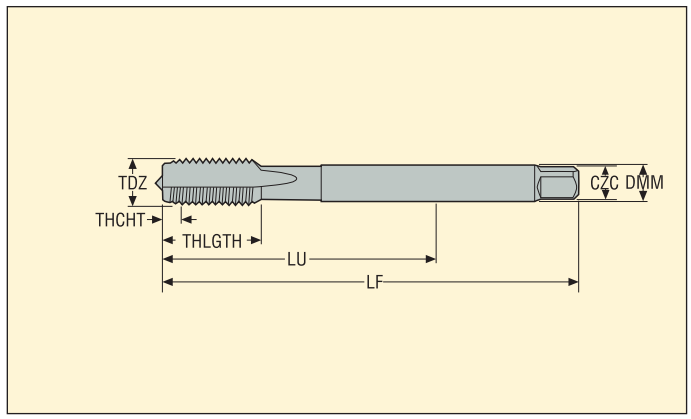

- For cutting data see page(s) 178
- Coating: TiCN<=M24, TiAlN>M24
- Substrate: HSS-E-PM

Designation	TDZ	Pitch		Dimensions in mm					NOF	PHDR	BSG	TCTR	THCHT
		mm	TPI	DMM	LU	THLGTH	LF	CZC					
MTS-M8X1.25ISO6HX-XC-K002	M8	1,25	–	6,0	67,0	18,0	90,0	6.00X4.90	4	6,8	DIN376	6HX	C
MTS-M10X1.50ISO6HX-XC-K002	M10	1,50	–	7,0	77,0	20,0	100,0	7.00X5.50	4	8,6	DIN376	6HX	C
MTS-M12X1.75ISO6HX-XC-K002	M12	1,75	–	9,0	83,0	23,0	110,0	9.00X7.00	4	10,4	DIN376	6HX	C
MTS-M14X2.00ISO6HX-XC-K002	M14	2,00	–	11,0	81,0	25,0	110,0	11.00X9.00	4	12,1	DIN376	6HX	C
MTS-M16X2.00ISO6HX-XC-K002	M16	2,00	–	12,0	68,0	25,0	110,0	12.00X9.00	4	14,1	DIN376	6HX	C
MTS-M18X2.50ISO6HX-XC-K002	M18	2,50	–	14,0	81,0	30,0	125,0	14.00X11.00	4	15,7	DIN376	6HX	C
MTS-M20X2.50ISO6HX-XC-K002	M20	2,50	–	16,0	95,0	30,0	140,0	16.00X12.00	4	17,7	DIN376	6HX	C
MTS-M22X2.50ISO6HX-XC-K002	M22	2,50	–	18,0	93,0	34,0	140,0	18.00X14.50	4	19,7	DIN376	6HX	C
MTS-M24X3.00ISO6HX-XC-K002	M24	3,00	–	18,0	113,0	38,0	160,0	18.00X14.50	4	21,0	DIN376	6HX	C
MTS-M27X3.00ISO6HX-XC-K002	M27	3,00	–	20,0	97,0	38,0	160,0	20.00X16.00	4	24,0	DIN376	6HX	C
MTS-M30X3.50ISO6HX-XC-K002	M30	3,50	–	22,0	115,0	45,0	180,0	22.00X18.00	4	26,5	DIN376	6HX	C
MTS-M33X3.50ISO6HX-XC-K002	M33	3,50	–	25,0	113,0	50,0	180,0	25.00X20.00	4	29,5	DIN376	6HX	C
MTS-M36X4.00ISO6HX-XC-K002	M36	4,00	–	28,0	131,0	55,0	200,0	28.00X22.00	4	32,0	DIN376	6HX	C
MTS-M39X4.00ISO6HX-XC-K002	M39	4,00	–	32,0	102,0	60,0	200,0	32.00X24.00	4	35,0	DIN376	6HX	C
MTS-M42X4.50ISO6HX-XC-K002	M42	4,50	–	32,0	102,0	60,0	200,0	32.00X24.00	4	37,5	DIN376	6HX	C

Please check availability in current price and stock-list

MTS-K002-A

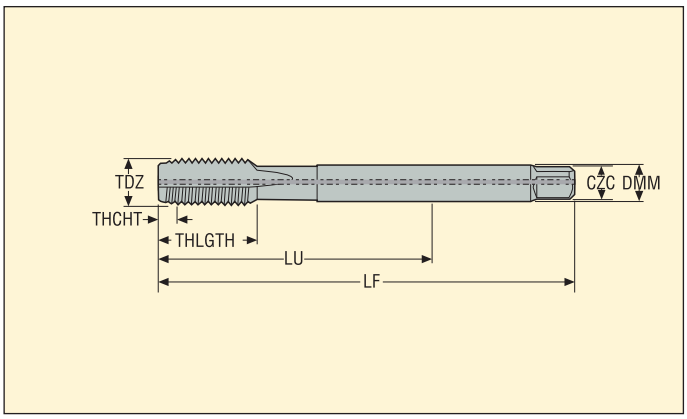

- For cutting data see page(s) 178
- Coating: TiAlN
- Substrate: HSS-E-PM
- Internal coolant

Designation	TDZ	Pitch		Dimensions in mm					NOF	PHDR	BSG	TCTR	THCHT
		mm	TPI	DMM	LU	THLGTH	LF	CZC					
MTS-M12X1.75ISO6HX-XC-K002-A	M12	1,75	–	9,0	83,0	24,0	110,0	9.00X7.00	4	10,4	DIN376	6HX	C
MTS-M12X1.75ISO6HX-XE-K002-A	M12	1,75	–	9,0	83,0	24,0	110,0	9.00X7.00	4	10,4	DIN376	6HX	E
MTS-M14X2.00ISO6HX-XC-K002-A	M14	2,00	–	11,0	81,0	25,0	110,0	11.00X9.00	4	12,1	DIN376	6HX	C
MTS-M16X2.00ISO6HX-XC-K002-A	M16	2,00	–	12,0	68,0	25,0	110,0	12.00X9.00	4	14,1	DIN376	6HX	C
MTS-M20X2.50ISO6HX-XC-K002-A	M20	2,50	–	16,0	95,0	30,0	140,0	16.00X12.00	4	17,7	DIN376	6HX	C
MTS-M22X2.50ISO6HX-XC-K002-A	M22	2,50	–	18,0	93,0	34,0	140,0	18.00X14.50	4	19,7	DIN376	6HX	C
MTS-M24X3.00ISO6HX-XC-K002-A	M24	3,00	–	18,0	113,0	38,0	160,0	18.00X14.50	4	21,0	DIN376	6HX	C
MTS-M27X3.00ISO6HX-XC-K002-A	M27	3,00	–	20,0	97,0	38,0	160,0	20.00X16.00	4	24,0	DIN376	6HX	C
MTS-M30X3.50ISO6HX-XC-K002-A	M30	3,50	–	22,0	115,0	45,0	180,0	22.00X18.00	4	26,5	DIN376	6HX	C
MTS-M33X3.50ISO6HX-XC-K002-A	M33	3,50	–	25,0	113,0	50,0	180,0	25.00X20.00	4	29,5	DIN376	6HX	C
MTS-M36X4.00ISO6HX-XC-K002-A	M36	4,00	–	28,0	131,0	55,0	200,0	28.00X22.00	4	32,0	DIN376	6HX	C
MTS-M39X4.00ISO6HX-XC-K002-A	M39	4,00	–	32,0	102,0	60,0	200,0	32.00X24.00	4	35,0	DIN376	6HX	C
MTS-M42X4.50ISO6HX-XC-K002-A	M42	4,50	–	32,0	102,0	60,0	200,0	32.00X24.00	4	37,5	DIN376	6HX	C

Please check availability in current price and stock-list

MTS-K011

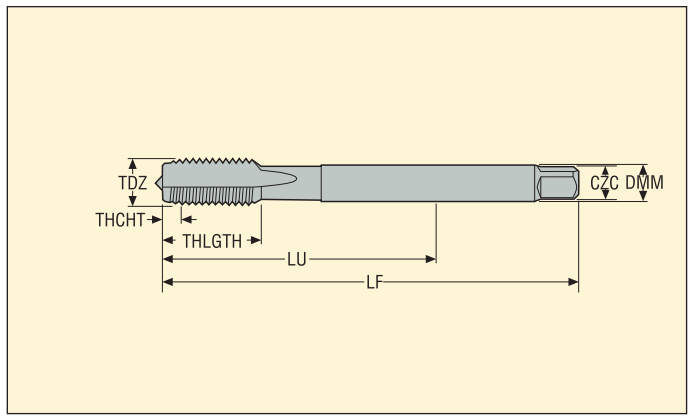

- For cutting data see page(s) 178
- Coating: TiAlN
- Substrate: HSS-E-PM

Designation	TDZ	Pitch		Dimensions in mm					NOF	PHDR	BSG	TCTR	THCHT
		mm	TPI	DMM	LU	THLGTH	LF	CZC					
MTS-M10X1.00ISO6HX-XC-K011	MF10X1.0	1,00	–	7,0	67,0	20,0	90,0	7.00X5.50	4	9,1	DIN374	6HX	C
MTS-M10X1.25ISO6HX-XC-K011	MF10X1.25	1,25	–	7,0	77,0	20,0	100,0	7.00X5.50	4	8,8	DIN374	6HX	C
MTS-M12X1.25ISO6HX-XC-K011	MF12X1.25	1,25	–	9,0	73,0	21,0	100,0	9.00X7.00	4	10,8	DIN374	6HX	C
MTS-M12X1.50ISO6HX-XC-K011	MF12X1.5	1,50	–	9,0	73,0	21,0	100,0	9.00X7.00	4	10,6	DIN374	6HX	C
MTS-M14X1.50ISO6HX-XC-K011	MF14X1.5	1,50	–	11,0	71,0	21,0	100,0	11.00X9.00	4	12,6	DIN374	6HX	C
MTS-M16X1.50ISO6HX-XC-K011	MF16X1.5	1,50	–	12,0	58,0	21,0	100,0	12.00X9.00	4	14,6	DIN374	6HX	C
MTS-M18X1.50ISO6HX-XC-K011	MF18X1.5	1,50	–	14,0	66,0	24,0	110,0	14.00X11.00	4	16,6	DIN374	6HX	C
MTS-M20X1.50ISO6HX-XC-K011	MF20X1.5	1,50	–	16,0	80,0	24,0	125,0	16.00X12.00	4	18,6	DIN374	6HX	C

Please check availability in current price and stock-list

MTS-K021

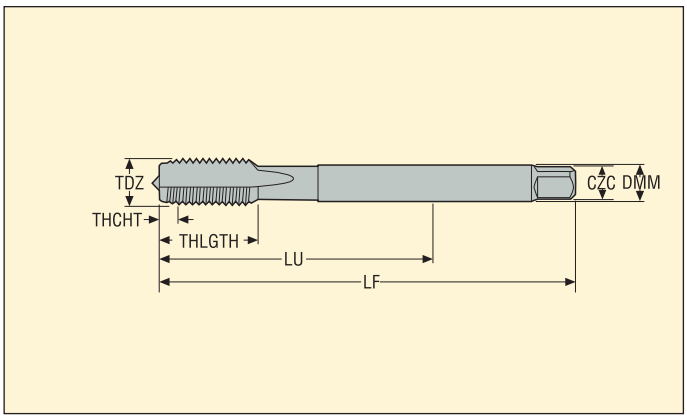

- For cutting data see page(s) 178
- Coating: TiAlN
- Substrate: HSS-E-PM

Designation	TDZ	Pitch		Dimensions in mm					NOF	PHDR	BSG	TCTR	THCHT
		mm	TPI	DMM	LU	THLGTH	LF	CZC					
MTS-1/8-28G-XC-K021	G1/8-28	–	28	7,0	67,0	20,0	90,0	7.00X5.50	4	8,8	DIN5156	NORMAL	C
MTS-1/4-19G-XC-K021	G1/4-19	–	19	11,0	71,0	21,0	100,0	11.00X9.00	4	11,8	DIN5156	NORMAL	C
MTS-3/8-19G-XC-K021	G3/8-19	–	19	12,0	58,0	21,0	100,0	12.00X9.00	5	15,3	DIN5156	NORMAL	C
MTS-1/2-14G-XC-K021	G1/2-14	–	14	16,0	80,0	24,0	125,0	16.00X12.00	5	19,1	DIN5156	NORMAL	C
MTS-3/4-14G-XC-K021	G3/4-14	–	14	20,0	77,0	28,0	140,0	20.00X16.00	6	24,6	DIN5156	NORMAL	C
MTS-1-11G-XC-K021	G1-11	–	11	25,0	93,0	30,0	160,0	25.00X20.00	6	30,9	DIN5156	NORMAL	C

Please check availability in current price and stock-list

MTS-K031

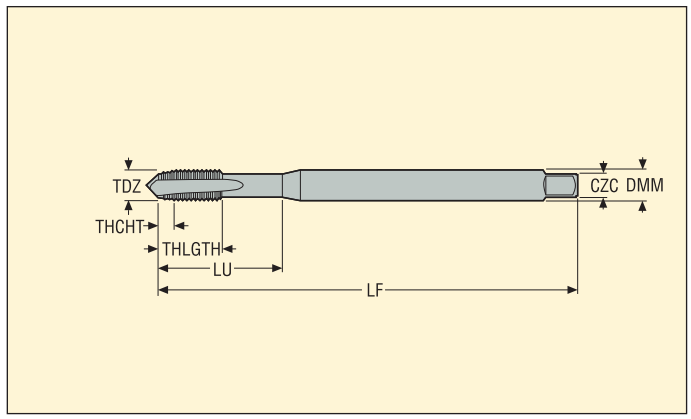

- For cutting data see page(s) 178
- Coating: TiAlN
- Substrate: HSS-E-PM

Designation	TDZ	Pitch		Dimensions in mm					NOF	PHDR	BSG	TCTR	THCHT
		mm	TPI	DMM	LU	THLGTH	LF	CZC					
MTS-1/4-20UNC-XC-K031	UNC1/4-20	–	20	7,0	30,0	15,0	80,0	7.00X5.50	4	5,2	DIN2184-1	2BX	C
MTS-5/16-18UNC-XC-K031	UNC5/16-18	–	18	8,0	35,0	18,0	90,0	8.00X6.20	4	6,7	DIN2184-1	2BX	C
MTS-3/8-16UNC-XC-K031	UNC3/8-16	–	16	10,0	39,0	20,0	100,0	10.00X8.00	4	8,1	DIN2184-1	2BX	C
MTS-7/16-14UNC-XC-K031	UNC7/16-14	–	14	8,0	83,0	20,0	100,0	8.00X6.20	4	9,5	DIN2184-1	2BX	C
MTS-1/2-13UNC-XC-K031	UNC1/2-13	–	13	9,0	81,0	23,0	110,0	9.00X7.00	4	10,9	DIN2184-1	2BX	C
MTS-5/8-11UNC-XC-K031	UNC5/8-11	–	11	12,0	68,0	23,0	110,0	12.00X9.00	4	13,8	DIN2184-1	2BX	C
MTS-3/4-10UNC-XC-K031	UNC3/4-10	–	10	14,0	80,0	30,0	125,0	14.00X11.00	4	16,8	DIN2184-1	2BX	C
MTS-7/8-9UNC-XC-K031	UNC7/8-9	–	9	18,0	93,0	34,0	140,0	18.00X14.50	4	19,7	DIN2184-1	2BX	C

Please check availability in current price and stock-list

MTS-K041

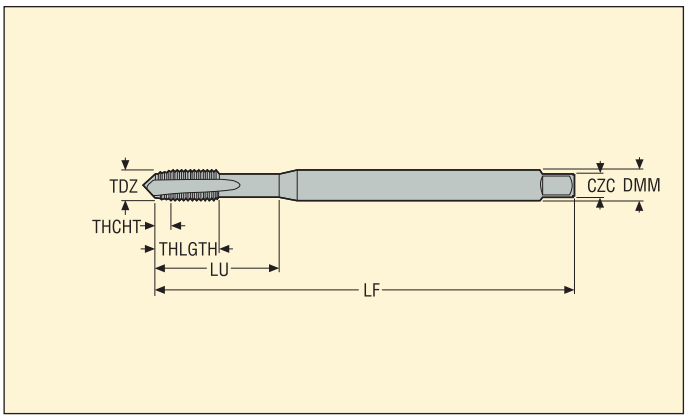

- For cutting data see page(s) 178
- Coating: TiAlN
- Substrate: HSS-E-PM

Designation	TDZ	Pitch		Dimensions in mm					NOF	PHDR	BSG	TCTR	THCHT
		mm	TPI	DMM	LU	THLGTH	LF	CZC					
MTS-1/4-28UNF-XC-K041	UNF1/4-28	–	28	7,0	30,0	15,0	80,0	7.00X5.50	4	5,5	DIN2184-1	2BX	C
MTS-5/16-24UNF-XC-K041	UNF5/16-24	–	24	8,0	35,0	18,0	90,0	8.00X6.20	4	7,0	DIN2184-1	2BX	C
MTS-3/8-24UNF-XC-K041	UNF3/8-24	–	24	10,0	39,0	20,0	100,0	10.00X8.00	4	8,6	DIN2184-1	2BX	C
MTS-7/16-20UNF-XC-K041	UNF7/16-20	–	20	8,0	83,0	20,0	100,0	8.00X6.20	4	10,0	DIN2184-1	2BX	C
MTS-1/2-20UNF-XC-K041	UNF1/2-20	–	20	9,0	81,0	23,0	110,0	9.00X7.00	4	11,5	DIN2184-1	2BX	C
MTS-5/8-18UNF-XC-K041	UNF5/8-18	–	18	12,0	68,0	23,0	110,0	12.00X9.00	4	14,6	DIN2184-1	2BX	C
MTS-3/4-16UNF-XC-K041	UNF3/4-16	–	16	14,0	80,0	30,0	125,0	14.00X11.00	4	17,6	DIN2184-1	2BX	C
MTS-7/8-14UNF-XC-K041	UNF7/8-14	–	14	18,0	93,0	34,0	140,0	18.00X14.50	4	20,6	DIN2184-1	2BX	C

Please check availability in current price and stock-list

MTH-N001

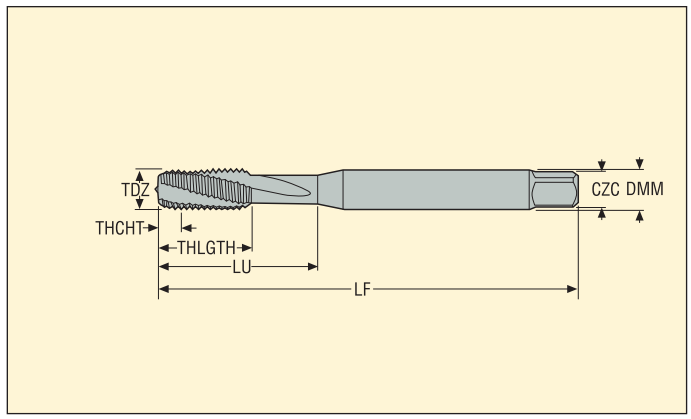

- For cutting data see page(s) 179
- Coating: BRIGHT
- Substrate: HSS-E-PM

Designation	TDZ	Pitch		Dimensions in mm					NOF	PHDR	BSG	TCTR	THCHT
		mm	TPI	DMM	LU	THLGTH	LF	CZC					
MTH-M3X0.50ISO6H-BC-N001	M3	0,50	–	3,5	18,0	9,0	56,0	3.50X2.70	3	2,5	DIN371	6H	C
MTH-M4X0.70ISO6H-BC-N001	M4	0,70	–	4,5	21,0	12,0	63,0	4.50X3.40	3	3,4	DIN371	6H	C
MTH-M5X0.80ISO6H-BC-N001	M5	0,80	–	6,0	25,0	13,0	70,0	6.00X4.90	3	4,3	DIN371	6H	C
MTH-M6X1.00ISO6H-BC-N001	M6	1,00	–	6,0	30,0	15,0	80,0	6.00X4.90	3	5,1	DIN371	6H	C
MTH-M8X1.25ISO6H-BC-N001	M8	1,25	–	8,0	35,0	18,0	90,0	8.00X6.20	3	6,8	DIN371	6H	C
MTH-M10X1.50ISO6H-BC-N001	M10	1,50	–	10,0	39,0	20,0	100,0	10.00X8.00	3	8,6	DIN371	6H	C

Please check availability in current price and stock-list

MTH-N002

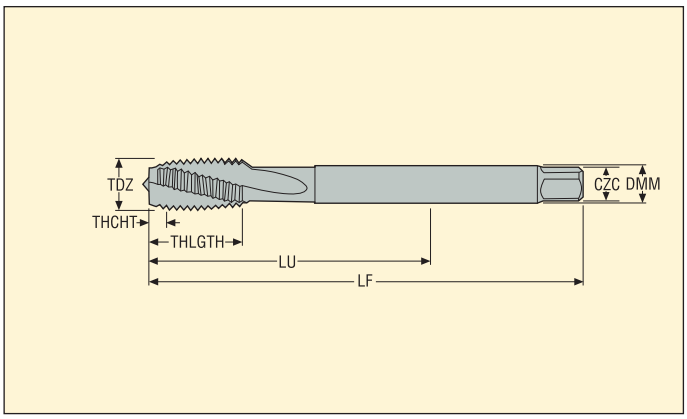

- For cutting data see page(s) 179
- Coating: BRIGHT
- Substrate: HSS-E-PM

Designation	TDZ	Pitch		Dimensions in mm					NOF	PHDR	BSG	TCTR	THCHT
		mm	TPI	DMM	LU	THLGTH	LF	CZC					
MTH-M12X1.75ISO6H-BC-N002	M12	1,75	–	9,0	83,0	23,0	110,0	9.00X7.00	3	10,4	DIN376	6H	C
MTH-M14X2.00ISO6H-BC-N002	M14	2,00	–	11,0	81,0	25,0	110,0	11.00X9.00	3	12,1	DIN376	6H	C
MTH-M16X2.00ISO6H-BC-N002	M16	2,00	–	12,0	68,0	25,0	110,0	12.00X9.00	3	14,1	DIN376	6H	C

Please check availability in current price and stock-list

MTP-N001

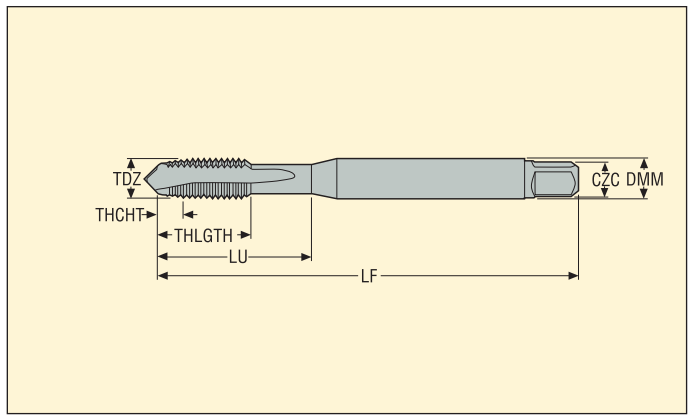

- For cutting data see page(s) 179
- Coating: BRIGHT
- Substrate: HSS-E

Designation	TDZ	Pitch		Dimensions in mm					NOF	PHDR	BSG	TCTR	THCHT
		mm	TPI	DMM	LU	THLGTH	LF	CZC					
MTP-M3X0.50ISO6H-TB-N001	M3	0,50	–	3,5	16,0	9,0	56,0	3.50X2.70	2	2,5	DIN371	6H	B
MTP-M4X0.70ISO6H-TB-N001	M4	0,70	–	4,5	19,0	12,0	63,0	4.50X3.40	2	3,4	DIN371	6H	B
MTP-M5X0.80ISO6H-TB-N001	M5	0,80	–	6,0	23,0	13,0	70,0	6.00X4.90	2	4,3	DIN371	6H	B
MTP-M6X1.00ISO6H-TB-N001	M6	1,00	–	6,0	27,0	15,0	80,0	6.00X4.90	3	5,1	DIN371	6H	B
MTP-M8X1.25ISO6H-TB-N001	M8	1,25	–	8,0	28,0	18,0	90,0	8.00X6.20	3	6,8	DIN371	6H	B
MTP-M10X1.50ISO6H-TB-N001	M10	1,50	–	10,0	30,0	20,0	100,0	10.00X8.00	3	8,6	DIN371	6H	B

Please check availability in current price and stock-list

MTP-N001-A

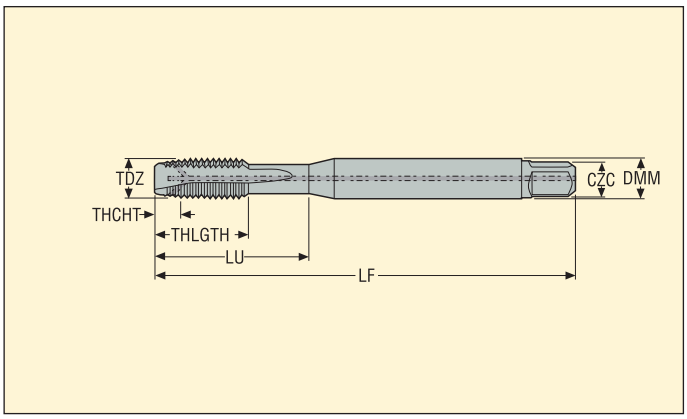

- For cutting data see page(s) 179
- Coating: BRIGHT
- Substrate: HSS-PM
- Internal coolant

Designation	TDZ	Pitch		Dimensions in mm					NOF	PHDR	BSG	TCTR	THCHT
		mm	TPI	DMM	LU	THLGTH	LF	CZC					
MTP-M4X0.70ISO6H-TB-N001-A	M4	0,70	–	4,5	19,0	12,0	63,0	4.50X3.40	2	3,4	DIN371	6H	B
MTP-M5X0.80ISO6H-TB-N001-A	M5	0,80	–	6,0	23,0	13,0	70,0	6.00X4.90	2	4,3	DIN371	6H	B
MTP-M6X1.00ISO6H-TB-N001-A	M6	1,00	–	6,0	27,0	15,0	80,0	6.00X4.90	3	5,1	DIN371	6H	B
MTP-M8X1.25ISO6H-TB-N001-A	M8	1,25	–	8,0	28,0	18,0	90,0	8.00X6.20	3	6,8	DIN371	6H	B
MTP-M10X1.50ISO6H-TB-N001-A	M10	1,50	–	10,0	30,0	20,0	100,0	10.00X8.00	3	8,6	DIN371	6H	B

Please check availability in current price and stock-list

MTP-N002

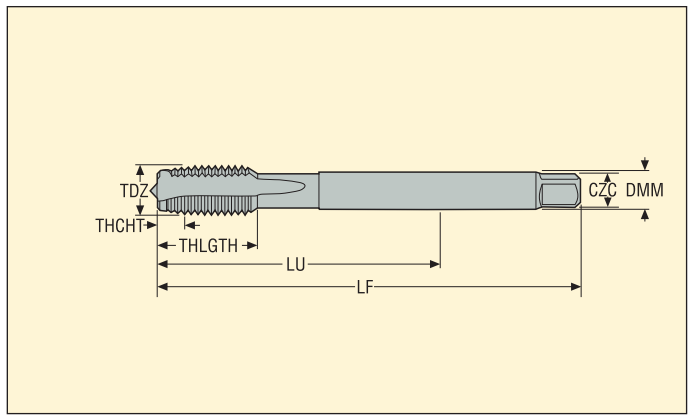

- For cutting data see page(s) 179
- Coating: BRIGHT
- Substrate: HSS-E

Designation	TDZ	Pitch		Dimensions in mm					NOF	PHDR	BSG	TCTR	THCHT
		mm	TPI	DMM	LU	THLGTH	LF	CZC					
MTP-M12X1.75ISO6H-TB-N002	M12	1,75	–	9,0	83,0	23,0	110,0	9.00X7.00	3	10,4	DIN376	6H	B
MTP-M14X2.00ISO6H-TB-N002	M14	2,00	–	11,0	81,0	25,0	110,0	11.00X9.00	4	12,1	DIN376	6H	B
MTP-M16X2.00ISO6H-TB-N002	M16	2,00	–	12,0	68,0	25,0	110,0	12.00X9.00	4	14,1	DIN376	6H	B

Please check availability in current price and stock-list

MTP-N002-A

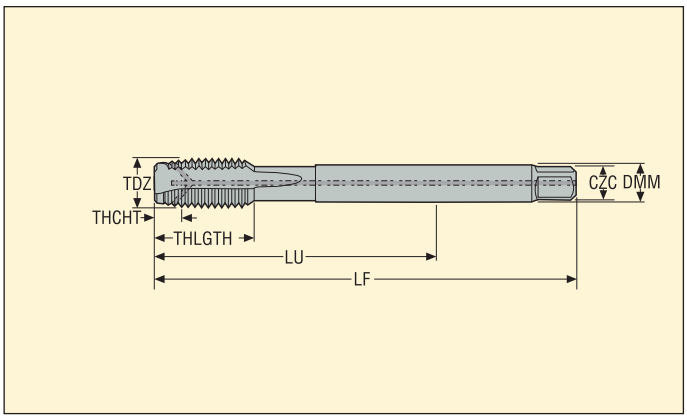

- For cutting data see page(s) 179
- Coating: BRIGHT
- Substrate: HSS-PM
- Internal coolant

Designation	TDZ	Pitch		Dimensions in mm					NOF	PHDR	BSG	TCTR	THCHT
		mm	TPI	DMM	LU	THLGTH	LF	CZC					
MTP-M12X1.75ISO6H-TB-N002-A	M12	1,75	–	9,0	83,0	23,0	110,0	9.00X7.00	3	10,4	DIN376	6H	B
MTP-M14X2.00ISO6H-TB-N002-A	M14	2,00	–	11,0	81,0	25,0	110,0	11.00X9.00	4	12,1	DIN376	6H	B
MTP-M16X2.00ISO6H-TB-N002-A	M16	2,00	–	12,0	68,0	25,0	110,0	12.00X9.00	4	14,1	DIN376	6H	B

Please check availability in current price and stock-list

MF-V053

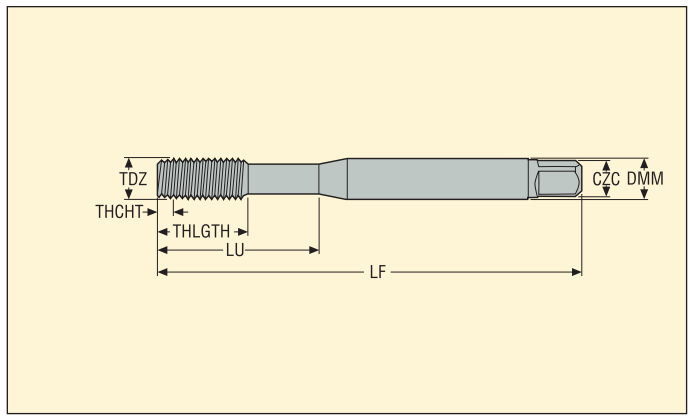

- Forming taps
- For cutting data see page(s) 180
- Coating: TiN
- Substrate: HSS-E

Designation	TDZ	Pitch		Dimensions in mm					NOF	PHDR	BSG	TCTR	THCHT
		mm	TPI	DMM	LU	THLGTH	LF	CZC					
MF-M3X0.50ISO6HX-XE-V053	M3	0,50	–	3,5	18,0	9,0	56,0	3.50X2.70	4	2,8	DIN2174	6HX	E
MF-M4X0.70ISO6HX-XE-V053	M4	0,70	–	4,5	21,0	12,0	63,0	4.50X3.40	5	3,7	DIN2174	6HX	E
MF-M5X0.80ISO6HX-XE-V053	M5	0,80	–	6,0	25,0	13,0	70,0	6.00X4.90	5	4,65	DIN2174	6HX	E
MF-M6X1.00ISO6HX-XE-V053	M6	1,00	–	6,0	30,0	15,0	80,0	6.00X4.90	5	5,55	DIN2174	6HX	E
MF-M8X1.25ISO6HX-XE-V053	M8	1,25	–	8,0	35,0	18,0	90,0	8.00X6.20	5	7,45	DIN2174	6HX	E
MF-M10X1.50ISO6HX-XE-V053	M10	1,50	–	10,0	39,0	20,0	100,0	10.00X8.00	5	9,35	DIN2174	6HX	E

Please check availability in current price and stock-list

MF-V054

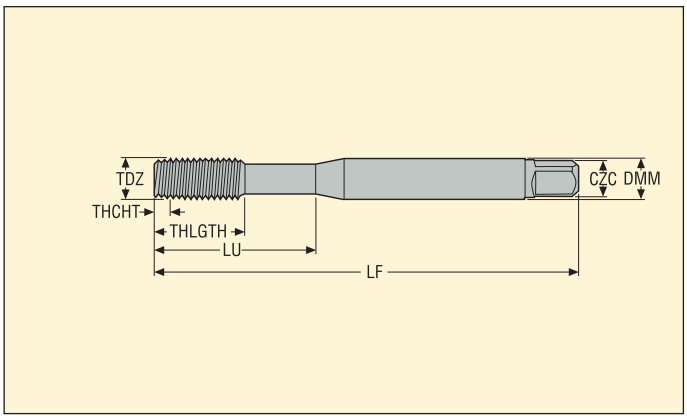

- Forming taps
- For cutting data see page(s) 180
- Coating: TiN
- Substrate: HSS-E
- * With tip shape. More information: Suggest at secotools.com

Designation	TDZ	Pitch		Dimensions in mm					NOF	PHDR	BSG	TCTR	THCHT
		mm	TPI	DMM	LU	THLGTH	LF	CZC					
MF-M1X0.25ISO5HX-XC-V054 *	M1	0,25	–	2,5	20,0	5,5	40,0	2.50X2.10	3	0,89	DIN2174	5HX	C
MF-M1.1X0.25ISO5HX-XC-V054 *	M1.1	0,25	–	2,5	20,0	5,5	40,0	2.50X2.10	3	0,99	DIN2174	5HX	C
MF-M1.2X0.25ISO5HX-XC-V054 *	M1.2	0,25	–	2,5	20,0	5,5	40,0	2.50X2.10	3	1,09	DIN2174	5HX	C
MF-M1.4X0.30ISO5HX-XC-V054 *	M1.4	0,30	–	2,5	20,0	7,0	40,0	2.50X2.10	3	1,27	DIN2174	5HX	C
MF-M1.6X0.35ISO6HX-XC-V054 *	M1.6	0,35	–	2,5	20,0	8,0	40,0	2.50X2.10	3	1,45	DIN2174	6HX	C
MF-M1.7X0.35ISO6HX-XC-V054 *	M1.7	0,35	–	2,5	20,0	8,0	40,0	2.50X2.10	3	1,55	DIN2174	6HX	C
MF-M1.8X0.35ISO6HX-XC-V054 *	M1.8	0,35	–	2,5	20,0	8,0	40,0	2.50X2.10	3	1,65	DIN2174	6HX	C
MF-M2X0.40ISO6HX-XC-V054 *	M2	0,40	–	2,8	11,0	6,0	45,0	2.80X2.10	3	1,82	DIN2174	6HX	C
MF-M2.2X0.45ISO6HX-XC-V054 *	M2.2	0,45	–	2,8	12,0	7,0	45,0	2.80X2.10	3	2,0	DIN2174	6HX	C
MF-M2.3X0.40ISO6HX-XC-V054 *	M2.3	0,40	–	2,8	12,0	7,0	45,0	2.80X2.10	3	2,12	DIN2174	6HX	C
MF-M2.5X0.45ISO6HX-XC-V054 *	M2.5	0,45	–	2,8	14,0	8,0	50,0	2.80X2.10	3	2,3	DIN2174	6HX	C
MF-M2.6X0.45ISO6HX-XC-V054 *	M2.6	0,45	–	2,8	14,0	8,0	50,0	2.80X2.10	3	2,4	DIN2174	6HX	C

Please check availability in current price and stock-list

MF-V055

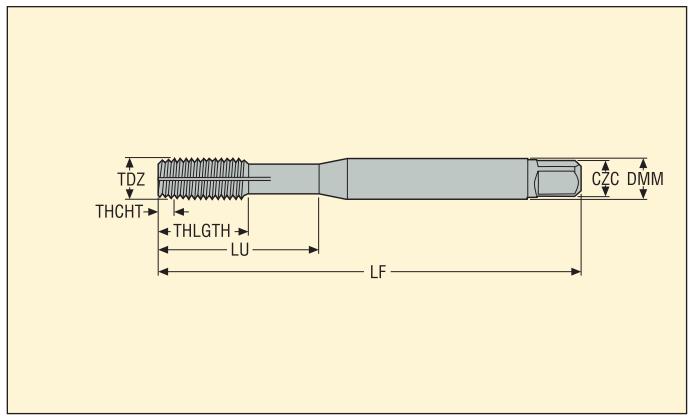

- Forming taps
- With channels for lubrication
- For cutting data see page(s) 180
- Coating: TiN
- Substrate: HSS-E
- * With tip shape. More information: Suggest at secotools.com

Designation	TDZ	Pitch		Dimensions in mm					NOF	PHDR	BSG	TCTR	THCHT
		mm	TPI	DMM	LU	THLGTH	LF	CZC					
MF-M3X0.50ISO6HX-XC-V055 *	M3	0,50	–	3,5	18,0	9,0	56,0	3.50X2.70	4	2,8	DIN2174	6HX	C
MF-M4X0.70ISO6HX-XC-V055 *	M4	0,70	–	4,5	21,0	12,0	63,0	4.50X3.40	5	3,7	DIN2174	6HX	C
MF-M5X0.80ISO6HX-XC-V055 *	M5	0,80	–	6,0	25,0	13,0	70,0	6.00X4.90	5	4,65	DIN2174	6HX	C
MF-M6X1.00ISO6HX-XC-V055 *	M6	1,00	–	6,0	30,0	15,0	80,0	6.00X4.90	5	5,55	DIN2174	6HX	C
MF-M7X1.00ISO6HX-XC-V055 *	M7	1,00	–	7,0	30,0	15,0	80,0	7.00X5.50	5	6,55	DIN2174	6HX	C
MF-M8X1.25ISO6HX-XC-V055	M8	1,25	–	8,0	35,0	18,0	90,0	8.00X6.20	5	7,45	DIN2174	6HX	C
MF-M10X1.50ISO6HX-XC-V055	M10	1,50	–	10,0	39,0	20,0	100,0	10.00X8.00	5	9,35	DIN2174	6HX	C
MF-M12X1.75ISO6HX-XC-V055 *	M12	1,75	–	9,0	83,0	23,0	110,0	9.00X7.00	5	11,2	DIN2174	6HX	C
MF-M14X2.00ISO6HX-XC-V055	M14	2,00	–	11,0	81,0	25,0	110,0	11.00X9.00	6	13,1	DIN2174	6HX	C
MF-M16X2.00ISO6HX-XC-V055	M16	2,00	–	12,0	68,0	25,0	110,0	12.00X9.00	6	15,1	DIN2174	6HX	C
MF-M20X2.50ISO6HX-XC-V055	M20	2,50	–	16,0	95,0	30,0	140,0	16.00X12.00	7	18,9	DIN2174	6HX	C
MF-M24X3.00ISO6HX-XC-V055	M24	3,00	–	18,0	113,0	36,0	160,0	18.00X14.50	8	22,65	DIN2174	6HX	C
MF-M27X3.00ISO6HX-XC-V055	M27	3,00	–	20,0	97,0	36,0	160,0	20.00X16.00	8	25,65	DIN2174	6HX	C
MF-M30X3.50ISO6HX-XC-V055	M30	3,50	–	22,0	115,0	40,0	180,0	22.00X18.00	10	28,45	DIN2174	6HX	C
MF-M33X3.50ISO6HX-XC-V055	M33	3,50	–	25,0	113,0	40,0	180,0	25.00X20.00	10	31,45	DIN2174	6HX	C
MF-M36X4.00ISO6HX-XC-V055	M36	4,00	–	28,0	131,0	50,0	200,0	28.00X22.00	10	34,23	DIN2174	6HX	C
MF-M39X4.00ISO6HX-XC-V055	M39	4,00	–	32,0	102,0	50,0	200,0	32.00X24.00	10	37,23	DIN2174	6HX	C
MF-M42X4.50ISO6HX-XC-V055	M42	4,50	–	32,0	102,0	50,0	200,0	32.00X24.00	10	40,0	DIN2174	6HX	C
MF-M48X5.00ISO6HX-XC-V055	M48	5,00	–	36,0	147,0	60,0	250,0	36.00X29.00	12	45,8	DIN2174	6HX	C

Please check availability in current price and stock-list

MF-V056

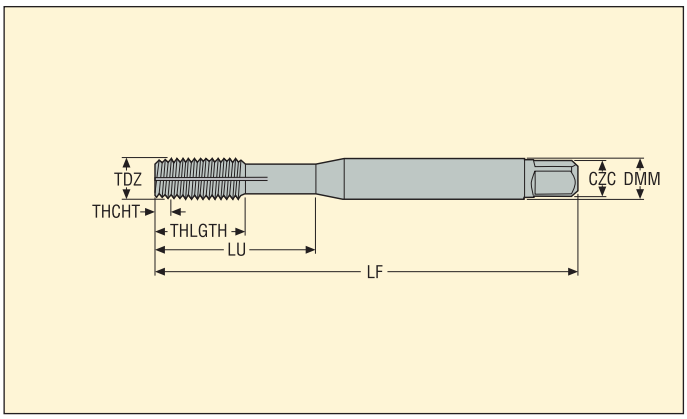

- Forming taps
- With channels for lubrication
- For cutting data see page(s) 180
- Coating: TiN
- Substrate: HSS-E
- * With tip shape. More information: Suggest at secotools.com

Designation	TDZ	Pitch		Dimensions in mm					NOF	PHDR	BSG	TCTR	THCHT
		mm	TPI	DMM	LU	THLGTH	LF	CZC					
MF-4-40UNC-XC-V056 *	UNC4-40	–	40	3,5	18,0	9,0	56,0	3.50X2.70	4	2,6	DIN2184-1	2BX	C
MF-6-32UNC-XC-V056 *	UNC6-32	–	32	4,0	20,0	11,0	56,0	4.00X3.00	4	3,2	DIN2184-1	2BX	C
MF-8-32UNC-XC-V056 *	UNC8-32	–	32	4,5	21,0	12,0	63,0	4.50X3.40	5	3,8	DIN2184-1	2BX	C
MF-10-24UNC-XC-V056 *	UNC10-24	–	24	6,0	25,0	13,0	70,0	6.00X4.90	5	4,4	DIN2184-1	2BX	C
MF-12-24UNC-XC-V056 *	UNC12-24	–	24	6,0	30,0	14,0	80,0	6.00X4.90	5	5,0	DIN2184-1	2BX	C
MF-1/4-20UNC-XC-V056 *	UNC1/4-20	–	20	7,0	30,0	15,0	80,0	7.00X5.50	5	5,8	DIN2184-1	2BX	C
MF-5/16-18UNC-XC-V056 *	UNC5/16-18	–	18	8,0	35,0	18,0	90,0	8.00X6.20	5	7,3	DIN2184-1	2BX	C
MF-3/8-16UNC-XC-V056 *	UNC3/8-16	–	16	10,0	39,0	20,0	100,0	10.00X8.00	5	8,8	DIN2184-1	2BX	C
MF-7/16-14UNC-XC-V056	UNC7/16-14	–	14	8,0	77,0	20,0	100,0	8.00X6.20	5	10,3	DIN2184-1	2BX	C
MF-1/2-13UNC-XC-V056	UNC1/2-13	–	13	9,0	83,0	23,0	110,0	9.00X7.00	6	11,9	DIN2184-1	2BX	C
MF-5/8-11UNC-XC-V056	UNC5/8-11	–	11	12,0	68,0	25,0	110,0	12.00X9.00	6	14,85	DIN2184-1	2BX	C
MF-3/4-10UNC-XC-V056	UNC3/4-10	–	10	14,0	81,0	30,0	125,0	14.00X11.00	7	17,93	DIN2184-1	2BX	C
MF-7/8-9UNC-XC-V056	UNC7/8-9	–	9	18,0	93,0	34,0	140,0	18.00X14.50	7	20,98	DIN2184-1	2BX	C
MF-1-8UNC-XC-V056	UNC1-8	–	8	18,0	113,0	38,0	160,0	18.00X14.50	8	24,0	DIN2184-1	2BX	C

Please check availability in current price and stock-list

MF-V057

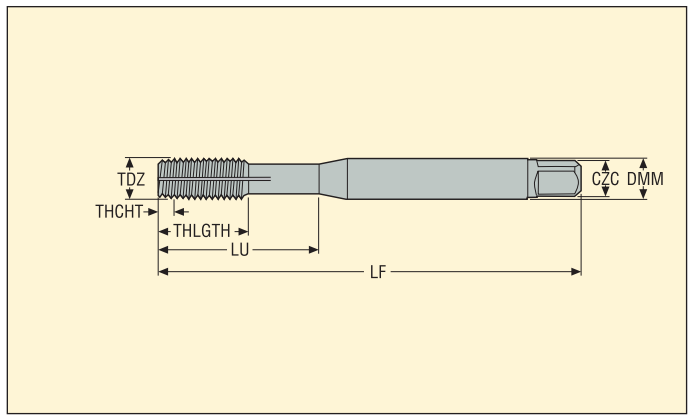

- Forming taps
- With channels for lubrication
- For cutting data see page(s) 180
- Coating: TiN
- Substrate: HSS-E
- * With tip shape. More information: Suggest at secotools.com

Designation	TDZ	Pitch		Dimensions in mm					NOF	PHDR	BSG	TCTR	THCHT
		mm	TPI	DMM	LU	THLGTH	LF	CZC					
MF-10-32UNF-XC-V057 *	UNF10-32	–	32	6,0	25,0	13,0	70,0	6.00X4.90	5	4,5	DIN2184-1	2BX	C
MF-1/4-28UNF-XC-V057 *	UNF1/4-28	–	28	7,0	30,0	15,0	80,0	7.00X5.50	5	6,0	DIN2184-1	2BX	C
MF-5/16-24UNF-XC-V057 *	UNF5/16-24	–	24	8,0	35,0	18,0	90,0	8.00X6.20	5	7,5	DIN2184-1	2BX	C
MF-3/8-24UNF-XC-V057 *	UNF3/8-24	–	24	10,0	39,0	20,0	100,0	10.00X8.00	5	9,1	DIN2184-1	2BX	C
MF-7/16-20UNF-XC-V057	UNF7/16-20	–	20	8,0	77,0	20,0	100,0	8.00X6.20	5	10,6	DIN2184-1	2BX	C
MF-1/2-20UNF-XC-V057	UNF1/2-20	–	20	9,0	83,0	23,0	110,0	9.00X7.00	6	12,1	DIN2184-1	2BX	C
MF-5/8-18UNF-XC-V057	UNF5/8-18	–	18	12,0	68,0	25,0	110,0	12.00X9.00	6	15,25	DIN2184-1	2BX	C
MF-3/4-16UNF-XC-V057	UNF3/4-16	–	16	14,0	81,0	30,0	125,0	14.00X11.00	7	18,35	DIN2184-1	2BX	C
MF-1-12UNF-XC-V057	UNF1-12	–	12	18,0	113,0	38,0	160,0	18.00X14.50	8	24,46	DIN2184-1	2BX	C

Please check availability in current price and stock-list

MF-V058

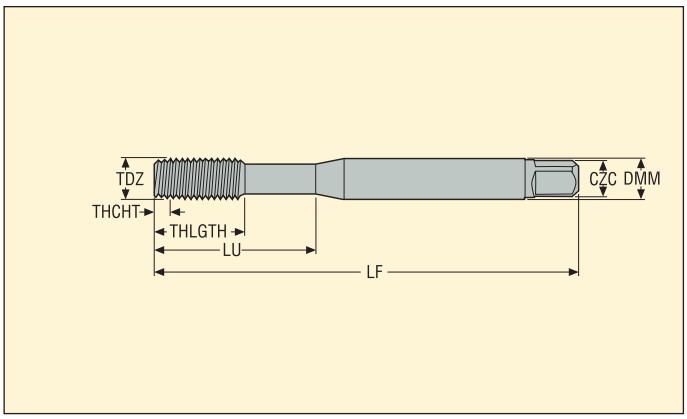

- Forming taps
- For cutting data see page(s) 180
- Coating: TiN
- Substrate: HSS-E
- * With tip shape. More information: Suggest at secotools.com

Designation	TDZ	Pitch		Dimensions in mm					NOF	PHDR	BSG	TCTR	THCHT
		mm	TPI	DMM	LU	THLGTH	LF	CZC					
MF-M3X0.50ISO6GX-XC-V058 *	M3	0,50	–	3,5	18,0	9,0	56,0	3.50X2.70	4	2,8	DIN2174	6GX	C
MF-M3.5X0.60ISO6GX-XC-V058 *	M3.5	0,60	–	4,0	20,0	11,0	56,0	4.00X3.00	4	3,2	DIN2174	6GX	C
MF-M4X0.70ISO6GX-XC-V058 *	M4	0,70	–	4,5	21,0	12,0	63,0	4.50X3.40	5	3,7	DIN2174	6GX	C
MF-M5X0.80ISO6GX-XC-V058 *	M5	0,80	–	6,0	25,0	13,0	70,0	6.00X4.90	5	4,65	DIN2174	6GX	C
MF-M6X1.00ISO6GX-XC-V058 *	M6	1,00	–	6,0	30,0	15,0	80,0	6.00X4.90	5	5,55	DIN2174	6GX	C
MF-M8X1.25ISO6GX-XC-V058	M8	1,25	–	8,0	35,0	18,0	90,0	8.00X6.20	5	7,45	DIN2174	6GX	C
MF-M10X1.50ISO6GX-XC-V058	M10	1,50	–	10,0	39,0	20,0	100,0	10.00X8.00	5	9,35	DIN2174	6GX	C
MF-M12X1.75ISO6GX-XC-V058 *	M12	1,75	–	9,0	83,0	23,0	110,0	9.00X7.00	5	11,2	DIN2174	6GX	C

Please check availability in current price and stock-list

MF-V059

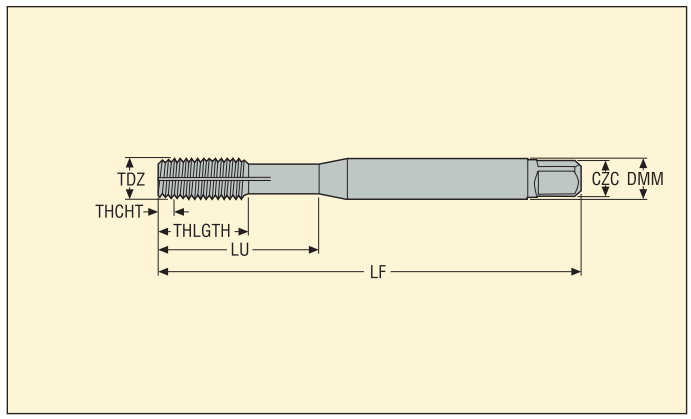

- Forming taps
- With channels for lubrication
- For cutting data see page(s) 180
- Coating: TiN
- Substrate: HSS-E
- * With tip shape. More information: Suggest at secotools.com

Designation	TDZ	Pitch		Dimensions in mm					NOF	PHDR	BSG	TCTR	THCHT
		mm	TPI	DMM	LU	THLGTH	LF	CZC					
MF-1/8-28G-XC-V059 *	G1/8-28	–	28	7,0	67,0	20,0	90,0	7.00X5.50	5	9,3	DIN2189	NORMAL-X	C
MF-1/4-19G-XC-V059	G1/4-19	–	19	11,0	71,0	21,0	100,0	11.00X9.00	6	12,5	DIN2189	NORMAL-X	C
MF-3/8-19G-XC-V059	G3/8-19	–	19	12,0	58,0	21,0	100,0	12.00X9.00	6	16,0	DIN2189	NORMAL-X	C
MF-1/2-14G-XC-V059	G1/2-14	–	14	16,0	80,0	24,0	125,0	16.00X12.00	7	20,0	DIN2189	NORMAL-X	C
MF-5/8-14G-XC-V059	G5/8-14	–	14	18,0	78,0	24,0	125,0	18.00X14.50	7	22,0	DIN2189	NORMAL-X	C

Please check availability in current price and stock-list

MF-V060-A

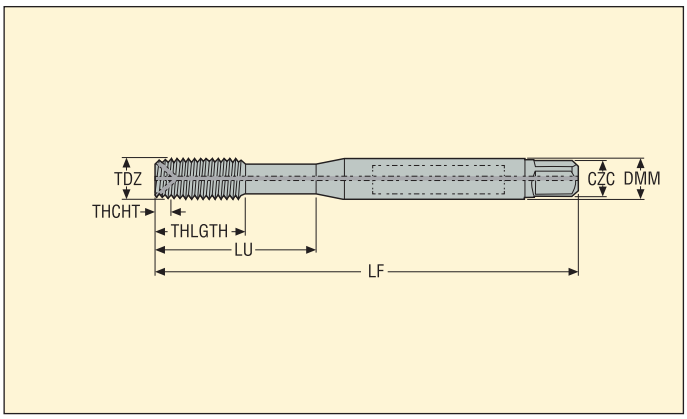

- Forming taps
- For cutting data see page(s) 180
- Coating: TiN
- Substrate: HSS-E
- Internal coolant

Designation	TDZ	Pitch		Dimensions in mm					NOF	PHDR	BSG	TCTR	THCHT
		mm	TPI	DMM	LU	THLGTH	LF	CZC					
MF-M5X0.80ISO6HX-XC-V060-A	M5	0,80	–	6,0	21,0	13,0	70,0	6.00X4.90	5	4,65	DIN2174	6HX	C
MF-M6X1.00ISO6HX-XC-V060-A	M6	1,00	–	6,0	26,0	15,0	80,0	6.00X4.90	5	5,55	DIN2174	6HX	C
MF-M8X1.25ISO6HX-XC-V060-A	M8	1,25	–	8,0	30,0	18,0	90,0	8.00X6.20	5	7,45	DIN2174	6HX	C
MF-M10X1.50ISO6HX-XC-V060-A	M10	1,50	–	10,0	33,0	20,0	100,0	10.00X8.00	5	9,35	DIN2174	6HX	C
MF-M12X1.75ISO6HX-XC-V060-A	M12	1,75	–	9,0	83,0	23,0	110,0	9.00X7.00	5	11,2	DIN2174	6HX	C
MF-M14X2.00ISO6HX-XC-V060-A	M14	2,00	–	11,0	81,0	25,0	110,0	11.00X9.00	6	13,1	DIN2174	6HX	C
MF-M16X2.00ISO6HX-XC-V060-A	M16	2,00	–	12,0	68,0	25,0	110,0	12.00X9.00	6	15,1	DIN2174	6HX	C
MF-M18X2.50ISO6HX-XC-V060-A	M18	2,50	–	14,0	81,0	30,0	125,0	14.00X11.00	7	16,9	DIN2174	6HX	C
MF-M20X2.50ISO6HX-XC-V060-A	M20	2,50	–	16,0	95,0	30,0	140,0	16.00X12.00	7	18,9	DIN2174	6HX	C
MF-M22X2.50ISO6HX-XC-V060-A	M22	2,50	–	18,0	93,0	34,0	140,0	18.00X14.50	7	20,9	DIN2174	6HX	C
MF-M24X3.00ISO6HX-XC-V060-A	M24	3,00	–	18,0	113,0	38,0	160,0	18.00X14.50	8	22,65	DIN2174	6HX	C
MF-M27X3.00ISO6HX-XC-V060-A	M27	3,00	–	20,0	97,0	38,0	160,0	20.00X16.00	8	25,65	DIN2174	6HX	C
MF-M30X3.50ISO6HX-XC-V060-A	M30	3,50	–	22,0	115,0	45,0	180,0	22.00X18.00	10	28,45	DIN2174	6HX	C
MF-M33X3.50ISO6HX-XC-V060-A	M33	3,50	–	25,0	113,0	50,0	180,0	25.00X20.00	10	31,45	DIN2174	6HX	C
MF-M36X4.00ISO6HX-XC-V060-A	M36	4,00	–	28,0	131,0	55,0	200,0	28.00X22.00	10	34,23	DIN2174	6HX	C
MF-M39X4.00ISO6HX-XC-V060-A	M39	4,00	–	32,0	102,0	60,0	200,0	32.00X24.00	10	37,23	DIN2174	6HX	C
MF-M42X4.50ISO6HX-XC-V060-A	M42	4,50	–	32,0	102,0	60,0	200,0	32.00X24.00	10	40,0	DIN2174	6HX	C
MF-M48X5.00ISO6HX-XC-V060-A	M48	5,00	–	36,0	147,0	60,0	250,0	36.00X29.00	12	45,8	DIN2174	6HX	C

Please check availability in current price and stock-list

MF-V063

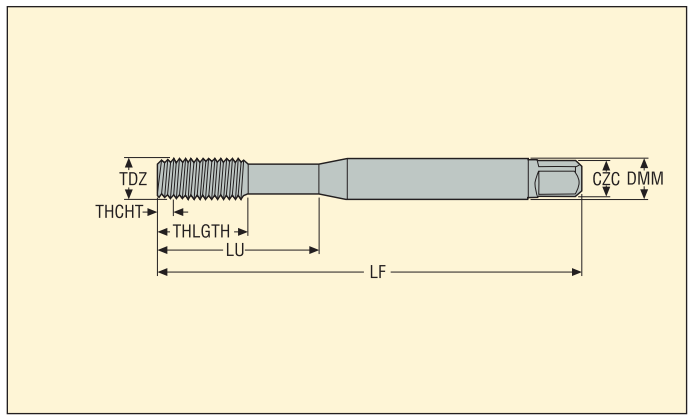

- Forming taps
- For cutting data see page(s) 180
- Coating: TiN
- Substrate: HSS-E
- * With tip shape. More information: Suggest at secotools.com

Designation	TDZ	Pitch		Dimensions in mm					NOF	PHDR	BSG	TCTR	THCHT
		mm	TPI	DMM	LU	THLGTH	LF	CZC					
MF-M5X0.50ISO6HX-XC-V063 *	MF5X0.5	0,50	–	6,0	25,0	13,0	70,0	6.00X4.90	5	4,8	DIN2174	6HX	C
MF-M6X0.75ISO6HX-XC-V063 *	MF6X0.75	0,75	–	6,0	30,0	15,0	80,0	6.00X4.90	5	5,65	DIN2174	6HX	C
MF-M7X0.75ISO6HX-XC-V063 *	MF7X0.75	0,75	–	7,0	30,0	15,0	80,0	7.00X5.50	5	6,65	DIN2174	6HX	C
MF-M8X0.75ISO6HX-XC-V063	MF8X0.75	0,75	–	6,0	57,0	18,0	80,0	6.00X4.90	5	7,65	DIN2174	6HX	C
MF-M8X1.00ISO6HX-XC-V063	MF8X1.0	1,00	–	6,0	67,0	18,0	90,0	6.00X4.90	5	7,55	DIN2174	6HX	C
MF-M10X1.00ISO6HX-XC-V063	MF10X1.0	1,00	–	7,0	75,0	20,0	100,0	7.00X5.50	5	9,55	DIN2174	6HX	C
MF-M10X1.25ISO6HX-XC-V063	MF10X1.25	1,25	–	7,0	75,0	20,0	100,0	7.00X5.50	5	9,45	DIN2174	6HX	C
MF-M12X1.00ISO6HX-XC-V063 *	MF12X1.0	1,00	–	9,0	73,0	23,0	100,0	9.00X7.00	5	11,55	DIN2174	6HX	C
MF-M12X1.25ISO6HX-XC-V063 *	MF12X1.25	1,25	–	9,0	73,0	23,0	100,0	9.00X7.00	5	11,45	DIN2174	6HX	C
MF-M12X1.50ISO6HX-XC-V063 *	MF12X1.5	1,50	–	9,0	73,0	23,0	100,0	9.00X7.00	5	11,35	DIN2174	6HX	C
MF-M14X1.00ISO6HX-XC-V063	MF14X1.0	1,00	–	11,0	71,0	21,0	100,0	11.00X9.00	6	13,55	DIN2174	6HX	C
MF-M14X1.25ISO6HX-XC-V063	MF14X1.25	1,25	–	11,0	71,0	21,0	100,0	11.00X9.00	6	13,45	DIN2174	6HX	C
MF-M14X1.50ISO6HX-XC-V063	MF14X1.5	1,50	–	11,0	71,0	21,0	100,0	11.00X9.00	6	13,35	DIN2174	6HX	C
MF-M16X1.50ISO6HX-XC-V063	MF16X1.5	1,50	–	12,0	58,0	21,0	100,0	12.00X9.00	6	15,35	DIN2174	6HX	C

Please check availability in current price and stock-list

MF-V063-A

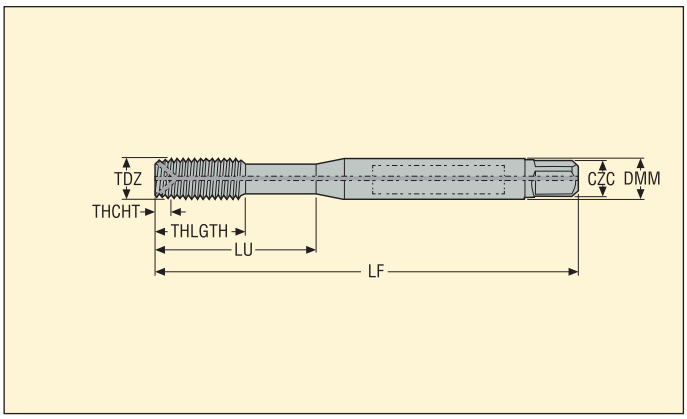

- Forming taps
- For cutting data see page(s) 180
- Coating: TiN
- Substrate: HSS-E
- Internal coolant

Designation	TDZ	Pitch		Dimensions in mm					NOF	PHDR	BSG	TCTR	THCHT
		mm	TPI	DMM	LU	THLGTH	LF	CZC					
MF-M5X0.50ISO6HX-XC-V063-A	MF5X0.5	0,50	–	6,0	25,0	13,0	70,0	6.00X4.90	5	4,8	DIN2174	6HX	C
MF-M6X0.75ISO6HX-XC-V063-A	MF6X0.75	0,75	–	6,0	30,0	15,0	80,0	6.00X4.90	5	5,65	DIN2174	6HX	C
MF-M8X0.75ISO6HX-XC-V063-A	MF8X0.75	0,75	–	6,0	57,0	15,0	80,0	6.00X4.90	5	7,65	DIN2174	6HX	C
MF-M8X1.00ISO6HX-XC-V063-A	MF8X1.0	1,00	–	6,0	67,0	18,0	90,0	6.00X4.90	5	7,55	DIN2174	6HX	C
MF-M10X0.75ISO6HX-XC-V063-A	MF10X0.75	0,75	–	7,0	67,0	18,0	90,0	7.00X5.50	5	9,65	DIN2174	6HX	C
MF-M10X1.00ISO6HX-XC-V063-A	MF10X1.0	1,00	–	7,0	67,0	18,0	90,0	7.00X5.50	5	9,55	DIN2174	6HX	C
MF-M10X1.25ISO6HX-XC-V063-A	MF10X1.25	1,25	–	7,0	77,0	20,0	100,0	7.00X5.50	5	9,45	DIN2174	6HX	C
MF-M12X1.00ISO6HX-XC-V063-A	MF12X1.0	1,00	–	9,0	73,0	21,0	100,0	9.00X7.00	5	11,55	DIN2174	6HX	C
MF-M12X1.25ISO6HX-XC-V063-A	MF12X1.25	1,25	–	9,0	73,0	21,0	100,0	9.00X7.00	5	11,45	DIN2174	6HX	C
MF-M12X1.50ISO6HX-XC-V063-A	MF12X1.5	1,50	–	9,0	73,0	21,0	100,0	9.00X7.00	5	11,35	DIN2174	6HX	C
MF-M14X1.00ISO6HX-XC-V063-A	MF14X1.0	1,00	–	11,0	71,0	21,0	100,0	11.00X9.00	6	13,55	DIN2174	6HX	C
MF-M14X1.25ISO6HX-XC-V063-A	MF14X1.25	1,25	–	11,0	71,0	21,0	100,0	11.00X9.00	6	13,45	DIN2174	6HX	C
MF-M14X1.50ISO6HX-XC-V063-A	MF14X1.5	1,50	–	11,0	71,0	21,0	100,0	11.00X9.00	6	13,35	DIN2174	6HX	C
MF-M16X1.00ISO6HX-XC-V063-A	MF16X1.0	1,00	–	12,0	58,0	21,0	100,0	12.00X9.00	6	15,55	DIN2174	6HX	C
MF-M16X1.50ISO6HX-XC-V063-A	MF16X1.5	1,50	–	12,0	58,0	21,0	100,0	12.00X9.00	6	15,35	DIN2174	6HX	C

Please check availability in current price and stock-list

MTH-V011

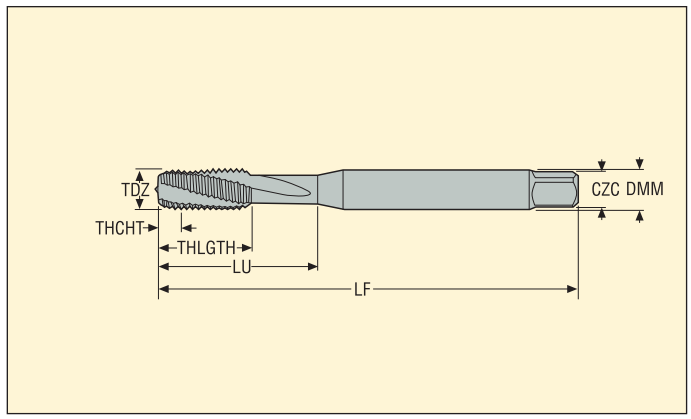

- For cutting data see page(s) 181
- Coating: TiN
- Substrate: HSS-E

Designation	TDZ	Pitch		Dimensions in mm					NOF	PHDR	BSG	TCTR	THCHT
		mm	TPI	DMM	LU	THLGTH	LF	CZC					
MTH-M8X0.75ISO6HX-BC-V011	MF8X0.75	0,75	–	6,0	57,0	13,0	80,0	6.00X4.90	3	7,3	DIN374	6HX	C
MTH-M8X1.00ISO6HX-BC-V011	MF8X1.0	1,00	–	6,0	67,0	13,0	90,0	6.00X4.90	3	7,1	DIN374	6HX	C
MTH-M10X1.00ISO6HX-BC-V011	MF10X1.0	1,00	–	7,0	67,0	13,0	90,0	7.00X5.50	3	9,1	DIN374	6HX	C
MTH-M10X1.25ISO6HX-BC-V011	MF10X1.25	1,25	–	7,0	77,0	15,0	100,0	7.00X5.50	3	8,8	DIN374	6HX	C
MTH-M12X1.00ISO6HX-BC-V011	MF12X1.0	1,00	–	9,0	73,0	15,0	100,0	9.00X7.00	3	11,1	DIN374	6HX	C
MTH-M12X1.25ISO6HX-BC-V011	MF12X1.25	1,25	–	9,0	73,0	15,0	100,0	9.00X7.00	3	10,8	DIN374	6HX	C
MTH-M12X1.50ISO6HX-BC-V011	MF12X1.5	1,50	–	9,0	73,0	15,0	100,0	9.00X7.00	3	10,6	DIN374	6HX	C
MTH-M14X1.00ISO6HX-BC-V011	MF14X1.0	1,00	–	11,0	71,0	15,0	100,0	11.00X9.00	3	13,1	DIN374	6HX	C
MTH-M14X1.25ISO6HX-BC-V011	MF14X1.25	1,25	–	11,0	71,0	15,0	100,0	11.00X9.00	3	12,8	DIN374	6HX	C
MTH-M14X1.50ISO6HX-BC-V011	MF14X1.5	1,50	–	11,0	71,0	15,0	100,0	11.00X9.00	3	12,6	DIN374	6HX	C
MTH-M16X1.00ISO6HX-BC-V011	MF16X1.0	1,00	–	12,0	58,0	15,0	100,0	12.00X9.00	3	15,1	DIN374	6HX	C
MTH-M16X1.50ISO6HX-BC-V011	MF16X1.5	1,50	–	12,0	58,0	15,0	100,0	12.00X9.00	3	14,6	DIN374	6HX	C
MTH-M18X1.00ISO6HX-BC-V011	MF18X1.0	1,00	–	14,0	66,0	17,0	110,0	14.00X11.00	3	17,1	DIN374	6HX	C
MTH-M18X1.50ISO6HX-BC-V011	MF18X1.5	1,50	–	14,0	66,0	17,0	110,0	14.00X11.00	3	16,6	DIN374	6HX	C
MTH-M20X1.00ISO6HX-BC-V011	MF20X1.0	1,00	–	16,0	80,0	17,0	125,0	16.00X12.00	3	19,1	DIN374	6HX	C
MTH-M20X1.50ISO6HX-BC-V011	MF20X1.5	1,50	–	16,0	80,0	17,0	125,0	16.00X12.00	3	18,6	DIN374	6HX	C
MTH-M20X2.00ISO6HX-BC-V011	MF20X2.0	2,00	–	16,0	80,0	17,0	125,0	16.00X12.00	3	18,1	DIN374	6HX	C
MTH-M22X1.50ISO6HX-BC-V011	MF22X1.5	1,50	–	18,0	78,0	17,0	125,0	18.00X14.50	4	20,5	DIN374	6HX	C
MTH-M24X1.50ISO6HX-BC-V011	MF24X1.5	1,50	–	18,0	93,0	20,0	140,0	18.00X14.50	4	22,5	DIN374	6HX	C
MTH-M24X2.00ISO6HX-BC-V011	MF24X2.0	2,00	–	18,0	93,0	20,0	140,0	18.00X14.50	4	22,0	DIN374	6HX	C

Please check availability in current price and stock-list

MTH-V015

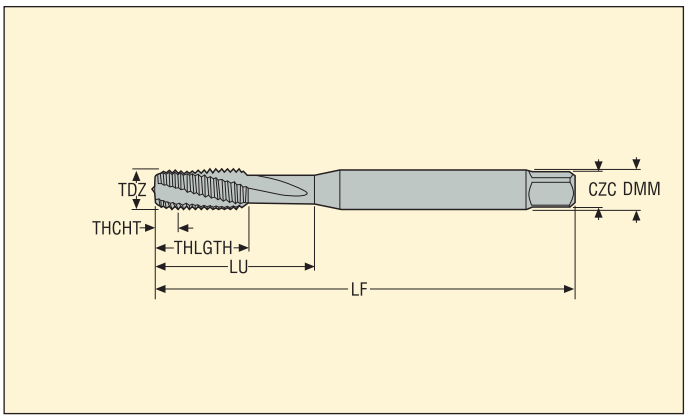

- For cutting data see page(s) 181
- Coating: TiN
- Substrate: HSS-E

Designation	TDZ	Pitch		Dimensions in mm					NOF	PHDR	BSG	TCTR	THCHT
		mm	TPI	DMM	LU	THLGTH	LF	CZC					
MTH-M3X0.50ISO6H-BC-V015	M3	0,50	–	3,5	18,0	9,0	56,0	3.50X2.70	3	2,5	DIN371	6H	C
MTH-M4X0.70ISO6H-BC-V015	M4	0,70	–	4,5	21,0	11,0	63,0	4.50X3.40	3	3,4	DIN371	6H	C
MTH-M5X0.80ISO6H-BC-V015	M5	0,80	–	6,0	25,0	13,0	70,0	6.00X4.90	3	4,3	DIN371	6H	C
MTH-M6X1.00ISO6H-BC-V015	M6	1,00	–	6,0	30,0	15,0	80,0	6.00X4.90	3	5,1	DIN371	6H	C
MTH-M8X1.25ISO6H-BC-V015	M8	1,25	–	8,0	35,0	18,0	90,0	8.00X6.20	3	6,8	DIN371	6H	C
MTH-M10X1.50ISO6H-BC-V015	M10	1,50	–	10,0	39,0	20,0	100,0	10.00X8.00	3	8,6	DIN371	6H	C

Please check availability in current price and stock-list

MTH-V016

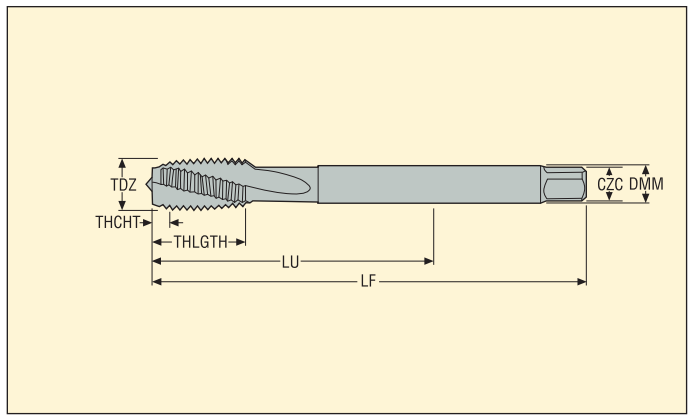

- For cutting data see page(s) 181
- Coating: TiN
- Substrate: HSS-E

Designation	TDZ	Pitch		Dimensions in mm					NOF	PHDR	BSG	TCTR	THCHT
		mm	TPI	DMM	LU	THLGTH	LF	CZC					
MTH-M12X1.75ISO6H-BC-V016	M12	1,75	–	9,0	83,0	23,0	110,0	9.00X7.00	3	10,4	DIN376	6H	C
MTH-M14X2.00ISO6H-BC-V016	M14	2,00	–	11,0	81,0	25,0	110,0	11.00X9.00	3	12,1	DIN376	6H	C
MTH-M16X2.00ISO6H-BC-V016	M16	2,00	–	12,0	68,0	25,0	110,0	12.00X9.00	3	14,1	DIN376	6H	C
MTH-M18X2.50ISO6H-BC-V016	M18	2,50	–	14,0	81,0	30,0	125,0	14.00X11.00	3	15,7	DIN376	6H	C
MTH-M20X2.50ISO6H-BC-V016	M20	2,50	–	16,0	95,0	30,0	140,0	16.00X12.00	3	17,7	DIN376	6H	C
MTH-M22X2.50ISO6H-BC-V016	M22	2,50	–	18,0	93,0	34,0	140,0	18.00X14.50	4	19,7	DIN376	6H	C
MTH-M24X3.00ISO6H-BC-V016	M24	3,00	–	18,0	113,0	38,0	160,0	18.00X14.50	4	21,0	DIN376	6H	C
MTH-M27X3.00ISO6H-BC-V016	M27	3,00	–	20,0	97,0	38,0	160,0	20.00X16.00	4	24,0	DIN376	6H	C
MTH-M30X3.50ISO6H-BC-V016	M30	3,50	–	22,0	115,0	45,0	180,0	22.00X18.00	4	26,5	DIN376	6H	C
MTH-M33X3.50ISO6H-BC-V016	M33	3,50	–	25,0	113,0	50,0	180,0	25.00X20.00	4	29,5	DIN376	6H	C
MTH-M36X4.00ISO6H-BC-V016	M36	4,00	–	28,0	131,0	55,0	200,0	28.00X22.00	4	32,0	DIN376	6H	C

Please check availability in current price and stock-list

MTH-V025

Long version

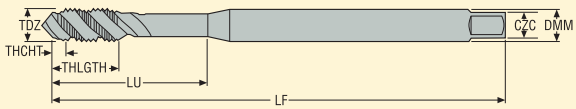

- For cutting data see page(s) 181
- Coating: TiN
- Substrate: HSS-E

Designation	TDZ	Pitch		Dimensions in mm					NOF	PHDR	BSG	TCTR	THCHT
		mm	TPI	DMM	LU	THLGTH	LF	CZC					
MTH-M3X0.50ISO6H-BC-V025	M3	0,50	–	3,5	18,0	6,0	112,0	3.50X2.70	3	2,5	DIN371	6H	C
MTH-M4X0.70ISO6H-BC-V025	M4	0,70	–	4,5	21,0	7,0	112,0	4.50X3.40	3	3,4	DIN371	6H	C
MTH-M5X0.80ISO6H-BC-V025	M5	0,80	–	6,0	25,0	8,0	125,0	6.00X4.90	3	4,3	DIN371	6H	C
MTH-M6X1.00ISO6H-BC-V025	M6	1,00	–	6,0	30,0	10,0	125,0	6.00X4.90	3	5,1	DIN371	6H	C
MTH-M8X1.25ISO6H-BC-V025	M8	1,25	–	8,0	40,0	13,0	140,0	8.00X6.20	3	6,8	DIN371	6H	C
MTH-M10X1.50ISO6H-BC-V025	M10	1,50	–	10,0	50,0	15,0	160,0	10.00X8.00	3	8,6	DIN371	6H	C

Please check availability in current price and stock-list

MTH-V026

Long version

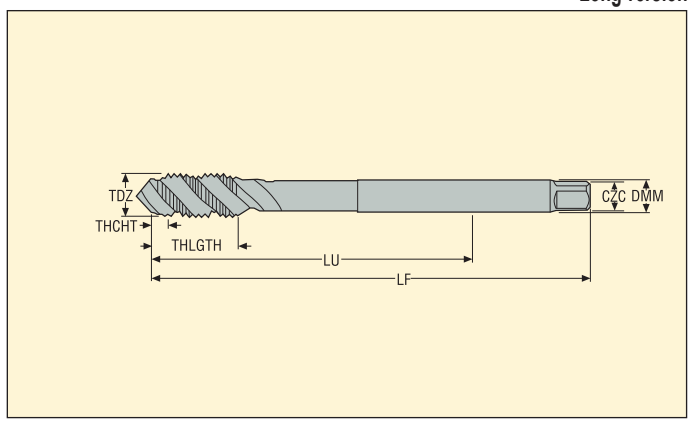

- For cutting data see page(s) 181
- Coating: TiN
- Substrate: HSS-E

Designation	TDZ	Pitch		Dimensions in mm					NOF	PHDR	BSG	TCTR	THCHT
		mm	TPI	DMM	LU	THLGTH	LF	CZC					
MTH-M12X1.75ISO6H-BC-V026	M12	1,75	–	9,0	153,0	16,0	180,0	9.00X7.00	3	10,4	DIN376	6H	C
MTH-M14X2.00ISO6H-BC-V026	M14	2,00	–	11,0	151,0	20,0	180,0	11.00X9.00	3	12,1	DIN376	6H	C
MTH-M16X2.00ISO6H-BC-V026	M16	2,00	–	12,0	158,0	20,0	200,0	12.00X9.00	3	14,1	DIN376	6H	C
MTH-M20X2.50ISO6H-BC-V026	M20	2,50	–	16,0	179,0	25,0	224,0	16.00X12.00	4	17,7	DIN376	6H	C

Please check availability in current price and stock-list

MTH-V028

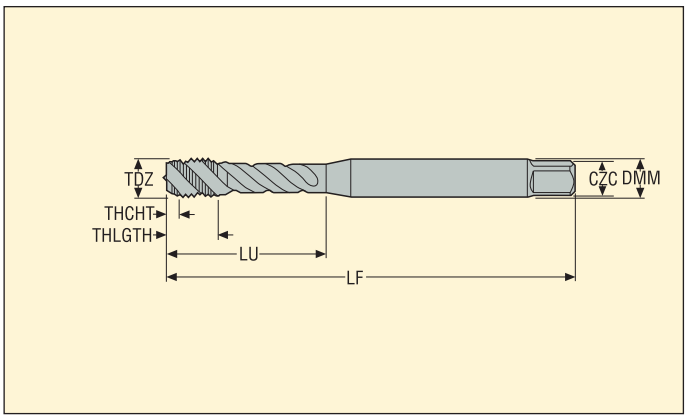

- For cutting data see page(s) 181
- Coating: TiN
- Substrate: HSS-PM

Designation	TDZ	Pitch		Dimensions in mm					NOF	PHDR	BSG	TCTR	THCHT
		mm	TPI	DMM	LU	THLGTH	LF	CZC					
MTH-M3X0.50ISO6G-BC-V028	M3	0,50	–	3,5	18,0	5,9	56,0	3.50X2.70	3	2,5	DIN371	6G	C
MTH-M4X0.70ISO6G-BC-V028	M4	0,70	–	4,5	21,0	6,7	63,0	4.50X3.40	3	3,4	DIN371	6G	C
MTH-M5X0.80ISO6G-BC-V028	M5	0,80	–	6,0	25,0	7,7	70,0	6.00X4.90	3	4,3	DIN371	6G	C
MTH-M6X1.00ISO6G-BC-V028	M6	1,00	–	6,0	31,0	10,0	80,0	6.00X4.90	3	5,1	DIN371	6G	C
MTH-M8X1.25ISO6G-BC-V028	M8	1,25	–	8,0	35,0	11,6	90,0	8.00X6.20	3	6,8	DIN371	6G	C
MTH-M10X1.50ISO6G-BC-V028	M10	1,50	–	10,0	39,0	15,1	100,0	10.00X8.00	3	8,6	DIN371	6G	C

Please check availability in current price and stock-list

MTH-V029

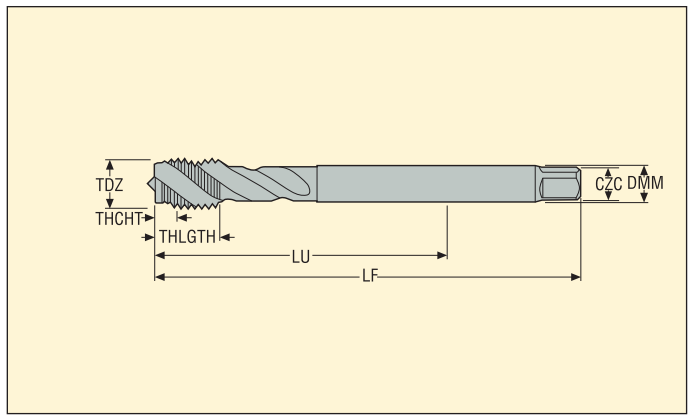

- For cutting data see page(s) 181
- Coating: TiN
- Substrate: HSS-PM ≤ M16, HSS-E > M16

Designation	TDZ	Pitch		Dimensions in mm					NOF	PHDR	BSG	TCTR	THCHT
		mm	TPI	DMM	LU	THLGTH	LF	CZC					
MTH-M12X1.75ISO6G-BC-V029	M12	1,75	–	9,0	83,0	16,0	110,0	9.00X7.00	3	10,4	DIN376	6G	C
MTH-M14X2.00ISO6G-BC-V029	M14	2,00	–	11,0	81,0	20,0	110,0	11.00X9.00	3	12,1	DIN376	6G	C
MTH-M16X2.00ISO6G-BC-V029	M16	2,00	–	12,0	68,0	20,0	110,0	12.00X9.00	4	14,1	DIN376	6G	C
MTH-M20X2.50ISO6G-BC-V029	M20	2,50	–	16,0	95,0	25,0	140,0	16.00X12.00	4	17,7	DIN376	6G	C

Please check availability in current price and stock-list

MTH-V030

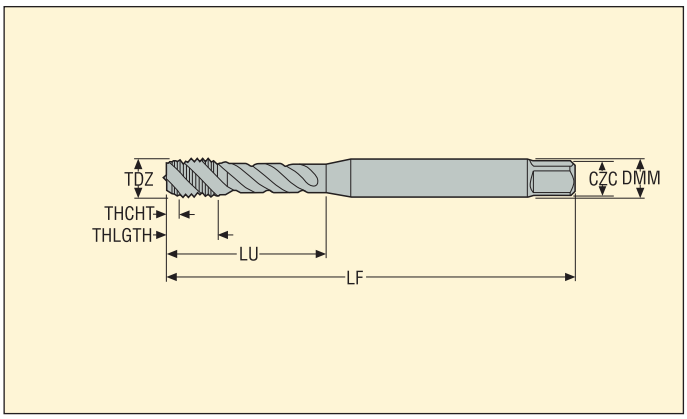

- For cutting data see page(s) 181
- Coating: TiN
- Substrate: HSS-E ≤ M2,5, HSS-PM > M2,5

Designation	TDZ	Pitch		Dimensions in mm					NOF	PHDR	BSG	TCTR	THCHT
		mm	TPI	DMM	LU	THLGTH	LF	CZC					
MTH-M2X0.40ISO6H-BC-V030	M2	0,40	–	2,8	9,0	4,0	45,0	2.80X2.10	3	1,6	DIN371	6H	C
MTH-M2.5X0.45ISO6H-BC-V030	M2.5	0,45	–	2,8	12,5	4,0	50,0	2.80X2.10	3	2,1	DIN371	6H	C
MTH-M3X0.50ISO6H-BC-V030	M3	0,50	–	3,5	18,0	5,9	56,0	3.50X2.70	3	2,5	DIN371	6H	C
MTH-M3.5X0.60ISO6H-BC-V030	M3.5	0,60	–	4,0	20,0	6,3	56,0	4.00X3.00	3	2,9	DIN371	6H	C
MTH-M4X0.70ISO6H-BC-V030	M4	0,70	–	4,5	21,0	6,7	63,0	4.50X3.40	3	3,4	DIN371	6H	C
MTH-M5X0.80ISO6H-BC-V030	M5	0,80	–	6,0	21,0	7,7	70,0	6.00X4.90	3	4,3	DIN371	6H	C
MTH-M6X1.00ISO6H-BC-V030	M6	1,00	–	6,0	31,0	10,0	80,0	6.00X4.90	3	5,1	DIN371	6H	C
MTH-M7X1.00ISO6H-BC-V030	M7	1,00	–	7,0	31,0	10,0	80,0	7.00X5.50	3	6,1	DIN371	6H	C
MTH-M8X1.25ISO6H-BC-V030	M8	1,25	–	8,0	35,0	11,6	90,0	8.00X6.20	3	6,8	DIN371	6H	C
MTH-M10X1.50ISO6H-BC-V030	M10	1,50	–	10,0	39,0	15,1	100,0	10.00X8.00	3	8,6	DIN371	6H	C

Please check availability in current price and stock-list

MTH-V030-A

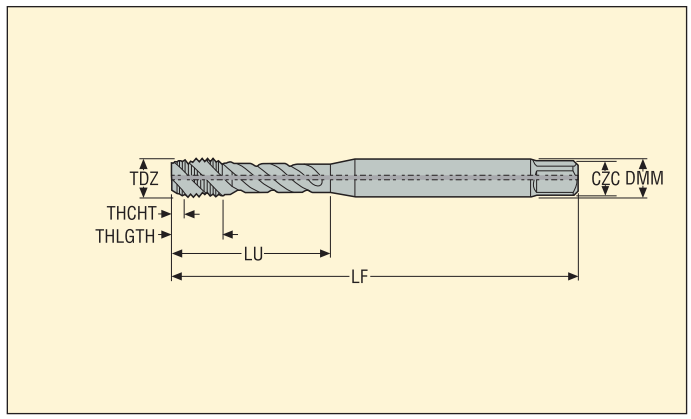

- For cutting data see page(s) 181
- Coating: TiN
- Substrate: HSS-PM
- Internal coolant

Designation	TDZ	Pitch		Dimensions in mm					NOF	PHDR	BSG	TCTR	THCHT
		mm	TPI	DMM	LU	THLGTH	LF	CZC					
MTH-M4X0.70ISO6H-BC-V030-A	M4	0,70	–	4,5	21,0	6,7	63,0	4.50X3.40	3	3,4	DIN371	6H	C
MTH-M5X0.80ISO6H-BC-V030-A	M5	0,80	–	6,0	25,0	7,7	70,0	6.00X4.90	3	4,3	DIN371	6H	C
MTH-M6X1.00ISO6H-BC-V030-A	M6	1,00	–	6,0	30,0	10,0	80,0	6.00X4.90	3	5,1	DIN371	6H	C
MTH-M8X1.25ISO6H-BC-V030-A	M8	1,25	–	8,0	35,0	11,6	90,0	8.00X6.20	3	6,8	DIN371	6H	C
MTH-M10X1.50ISO6H-BC-V030-A	M10	1,50	–	10,0	39,0	15,1	100,0	10.00X8.00	3	8,6	DIN371	6H	C

Please check availability in current price and stock-list

MTH-V033

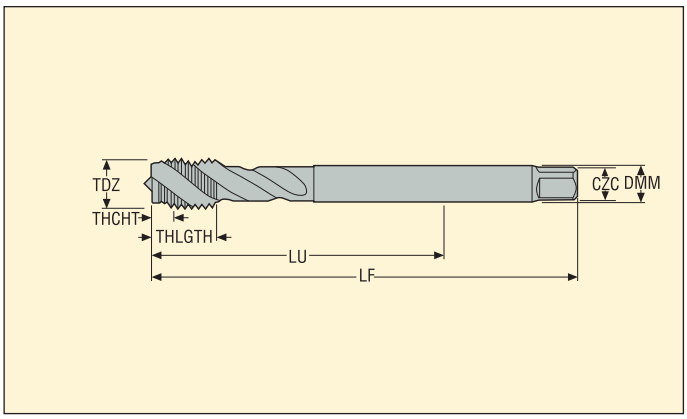

- For cutting data see page(s) 182
- Coating: TiN
- Substrate: HSS-PM ≤ M16, HSS-E > M16

Designation	TDZ	Pitch		Dimensions in mm					NOF	PHDR	BSG	TCTR	THCHT
		mm	TPI	DMM	LU	THLGTH	LF	CZC					
MTH-M6X1.00ISO6H-BC-V033	M6	1,00	–	4,5	59,0	10,0	80,0	4.50X3.40	3	5,1	DIN376	6H	C
MTH-M8X1.25ISO6H-BC-V033	M8	1,25	–	6,0	67,0	13,0	90,0	6.00X4.90	3	6,8	DIN376	6H	C
MTH-M10X1.50ISO6H-BC-V033	M10	1,50	–	7,0	77,0	15,0	100,0	7.00X5.50	3	8,6	DIN376	6H	C
MTH-M12X1.75ISO6H-BC-V033	M12	1,75	–	9,0	83,0	16,0	110,0	9.00X7.00	3	10,4	DIN376	6H	C
MTH-M14X2.00ISO6H-BC-V033	M14	2,00	–	11,0	81,0	20,0	110,0	11.00X9.00	3	12,1	DIN376	6H	C
MTH-M16X2.00ISO6H-BC-V033	M16	2,00	–	12,0	68,0	20,0	110,0	12.00X9.00	4	14,1	DIN376	6H	C
MTH-M18X2.50ISO6H-BC-V033	M18	2,50	–	14,0	81,0	25,0	125,0	14.00X11.00	4	15,7	DIN376	6H	C
MTH-M20X2.50ISO6H-BC-V033	M20	2,50	–	16,0	95,0	25,0	140,0	16.00X12.00	4	17,7	DIN376	6H	C
MTH-M22X2.50ISO6H-BC-V033	M22	2,50	–	18,0	93,0	25,0	140,0	18.00X14.50	4	19,7	DIN376	6H	C
MTH-M24X3.00ISO6H-BC-V033	M24	3,00	–	18,0	113,0	30,0	160,0	18.00X14.50	4	21,0	DIN376	6H	C
MTH-M27X3.00ISO6H-BC-V033	M27	3,00	–	20,0	97,0	30,0	160,0	20.00X16.00	4	24,0	DIN376	6H	C
MTH-M30X3.50ISO6H-BC-V033	M30	3,50	–	22,0	115,0	36,0	180,0	22.00X18.00	4	26,5	DIN376	6H	C
MTH-M33X3.50ISO6H-BC-V033	M33	3,50	–	25,0	113,0	36,0	180,0	25.00X20.00	4	29,5	DIN376	6H	C
MTH-M36X4.00ISO6H-BC-V033	M36	4,00	–	28,0	131,0	40,0	200,0	28.00X22.00	4	32,0	DIN376	6H	C
MTH-M39X4.00ISO6H-BC-V033	M39	4,00	–	32,0	102,0	40,0	200,0	32.00X24.00	4	35,0	DIN376	6H	C
MTH-M42X4.50ISO6H-BC-V033	M42	4,50	–	32,0	102,0	45,0	200,0	32.00X24.00	4	37,5	DIN376	6H	C
MTH-M48X5.00ISO6H-BC-V033	M48	5,00	–	36,0	147,0	50,0	250,0	36.00X29.00	4	43,0	DIN376	6H	C
MTH-M52X5.00ISO6H-BC-V033	M52	5,00	–	40,0	120,0	50,0	250,0	40.00X32.00	5	47,0	DIN376	6H	C
MTH-M56X5.50ISO6H-BC-V033	M56	5,50	–	40,0	120,0	55,0	250,0	40.00X32.00	5	50,5	DIN376	6H	C
MTH-M64X6.00ISO6H-BC-V033	M64	6,00	–	50,0	178,0	60,0	315,0	50.00X39.00	6	58,0	DIN376	6H	C

Please check availability in current price and stock-list

MTH-V033-A

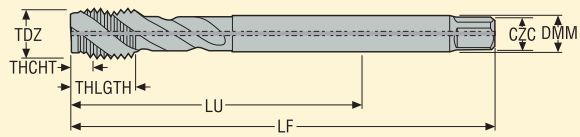

- For cutting data see page(s) 182
- Coating: TiN
- Substrate: HSS-PM ≤ M16, HSS-E > M16
- Internal coolant

Designation	TDZ	Pitch		Dimensions in mm					NOF	PHDR	BSG	TCTR	THCHT
		mm	TPI	DMM	LU	THLGTH	LF	CZC					
MTH-M12X1.75ISO6H-BC-V033-A	M12	1,75	–	9,0	83,0	16,0	110,0	9.00X7.00	3	10,4	DIN376	6H	C
MTH-M14X2.00ISO6H-BC-V033-A	M14	2,00	–	11,0	81,0	25,0	110,0	11.00X9.00	3	12,1	DIN376	6H	C
MTH-M16X2.00ISO6H-BC-V033-A	M16	2,00	–	12,0	68,0	20,0	110,0	12.00X9.00	4	14,1	DIN376	6H	C
MTH-M18X2.50ISO6H-BC-V033-A	M18	2,50	–	14,0	81,0	25,0	125,0	14.00X11.00	4	15,7	DIN376	6H	C
MTH-M20X2.50ISO6H-BC-V033-A	M20	2,50	–	16,0	95,0	25,0	140,0	16.00X12.00	4	17,7	DIN376	6H	C
MTH-M22X2.50ISO6H-BC-V033-A	M22	2,50	–	18,0	93,0	25,0	140,0	18.00X14.50	4	19,7	DIN376	6H	C
MTH-M24X3.00ISO6H-BC-V033-A	M24	3,00	–	18,0	113,0	30,0	160,0	18.00X14.50	4	21,0	DIN376	6H	C
MTH-M27X3.00ISO6H-BC-V033-A	M27	3,00	–	20,0	97,0	30,0	160,0	20.00X16.00	4	24,0	DIN376	6H	C
MTH-M30X3.50ISO6H-BC-V033-A	M30	3,50	–	22,0	115,0	36,0	180,0	22.00X18.00	4	26,5	DIN376	6H	C
MTH-M33X3.50ISO6H-BC-V033-A	M33	3,50	–	25,0	113,0	50,0	180,0	25.00X20.00	4	29,5	DIN376	6H	C
MTH-M36X4.00ISO6H-BC-V033-A	M36	4,00	–	28,0	131,0	55,0	200,0	28.00X22.00	4	32,0	DIN376	6H	C
MTH-M39X4.00ISO6H-BC-V033-A	M39	4,00	–	32,0	102,0	40,0	200,0	32.00X24.00	4	35,0	DIN376	6H	C
MTH-M42X4.50ISO6H-BC-V033-A	M42	4,50	–	32,0	102,0	45,0	200,0	32.00X24.00	4	37,5	DIN376	6H	C
MTH-M48X5.00ISO6H-BC-V033-A	M48	5,00	–	36,0	147,0	50,0	250,0	36.00X29.00	4	43,0	DIN376	6H	C
MTH-M52X5.00ISO6H-BC-V033-A	M52	5,00	–	40,0	120,0	50,0	250,0	40.00X32.00	5	47,0	DIN376	6H	C
MTH-M56X5.50ISO6H-BC-V033-A	M56	5,50	–	40,0	120,0	55,0	250,0	40.00X32.00	5	50,5	DIN376	6H	C
MTH-M64X6.00ISO6H-BC-V033-A	M64	6,00	–	50,0	178,0	60,0	315,0	50.00X39.00	6	58,0	DIN376	6H	C

Please check availability in current price and stock-list

MTH-V038

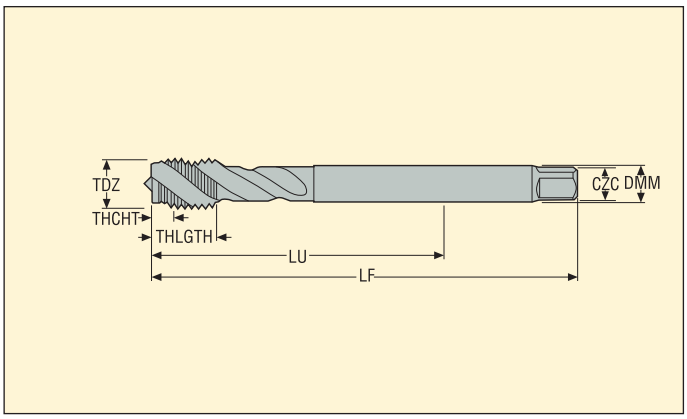

- For cutting data see page(s) 182
- Coating: TiN
- Substrate: HSS-PM ≤ M16, HSS-E > M16

Designation	TDZ	Pitch mm	Pitch TPI	Dimensions in mm DMM	LU	THLGTH	LF	CZC	NOF	PHDR	BSG	TCTR	THCHT
MTH-M4X0.50ISO6H-BC-V038	MF4X0.5	0,50	–	2,8	43,0	6,8	63,0	2.80X2.10	3	3,5	DIN374	6H	C
MTH-M5X0.50ISO6H-BC-V038	MF5X0.5	0,50	–	3,5	49,0	8,2	70,0	3.50X2.70	3	4,5	DIN374	6H	C
MTH-M6X0.75ISO6H-BC-V038	MF6X0.75	0,75	–	4,5	59,0	10,0	80,0	4.50X3.40	3	5,3	DIN374	6H	C
MTH-M8X0.75ISO6H-BC-V038	MF8X0.75	0,75	–	6,0	57,0	13,0	80,0	6.00X4.90	3	7,3	DIN374	6H	C
MTH-M8X1.00ISO6H-BC-V038	MF8X1.0	1,00	–	6,0	67,0	13,0	90,0	6.00X4.90	3	7,1	DIN374	6H	C
MTH-M9X1.00ISO6H-BC-V038	MF9X1.0	1,00	–	7,0	67,0	17,0	90,0	7.00X5.50	3	8,1	DIN374	6H	C
MTH-M10X0.75ISO6H-BC-V038	MF10X0.75	0,75	–	7,0	67,0	13,0	90,0	7.00X5.50	3	9,3	DIN374	6H	C
MTH-M10X1.00ISO6H-BC-V038	MF10X1.0	1,00	–	7,0	67,0	13,0	90,0	7.00X5.50	3	9,1	DIN374	6H	C
MTH-M10X1.25ISO6H-BC-V038	MF10X1.25	1,25	–	7,0	77,0	15,0	100,0	7.00X5.50	3	8,8	DIN374	6H	C
MTH-M11X1.00ISO6H-BC-V038	MF11X1.0	1,00	–	8,0	63,0	18,0	90,0	8.00X6.20	3	10,1	DIN374	6H	C
MTH-M11X1.25ISO6H-BC-V038	MF11X1.25	1,25	–	8,0	63,0	22,0	90,0	8.00X6.20	3	9,8	DIN374	6H	C
MTH-M12X1.00ISO6H-BC-V038	MF12X1.0	1,00	–	9,0	73,0	15,0	100,0	9.00X7.00	3	11,1	DIN374	6H	C
MTH-M12X1.25ISO6H-BC-V038	MF12X1.25	1,25	–	9,0	73,0	15,0	100,0	9.00X7.00	3	10,8	DIN374	6H	C
MTH-M12X1.50ISO6H-BC-V038	MF12X1.5	1,50	–	9,0	73,0	15,0	100,0	9.00X7.00	3	10,6	DIN374	6H	C
MTH-M14X1.00ISO6H-BC-V038	MF14X1.0	1,00	–	11,0	71,0	15,0	100,0	11.00X9.00	3	13,1	DIN374	6H	C
MTH-M14X1.25ISO6H-BC-V038	MF14X1.25	1,25	–	11,0	71,0	15,0	100,0	11.00X9.00	3	12,8	DIN374	6H	C
MTH-M14X1.50ISO6H-BC-V038	MF14X1.5	1,50	–	11,0	71,0	15,0	100,0	11.00X9.00	3	12,6	DIN374	6H	C
MTH-M16X1.00ISO6H-BC-V038	MF16X1.0	1,00	–	12,0	58,0	15,0	100,0	12.00X9.00	4	15,1	DIN374	6H	C
MTH-M16X1.50ISO6H-BC-V038	MF16X1.5	1,50	–	12,0	58,0	15,0	100,0	12.00X9.00	4	14,6	DIN374	6H	C
MTH-M18X1.00ISO6H-BC-V038	MF18X1.0	1,00	–	14,0	66,0	17,0	110,0	14.00X11.00	4	17,1	DIN374	6H	C
MTH-M18X1.50ISO6H-BC-V038	MF18X1.5	1,50	–	14,0	66,0	17,0	110,0	14.00X11.00	4	16,6	DIN374	6H	C
MTH-M20X1.00ISO6H-BC-V038	MF20X1.0	1,00	–	16,0	80,0	17,0	125,0	16.00X12.00	4	19,1	DIN374	6H	C
MTH-M20X1.50ISO6H-BC-V038	MF20X1.5	1,50	–	16,0	80,0	17,0	125,0	16.00X12.00	4	18,6	DIN374	6H	C

Please check availability in current price and stock-list

MTH-V038

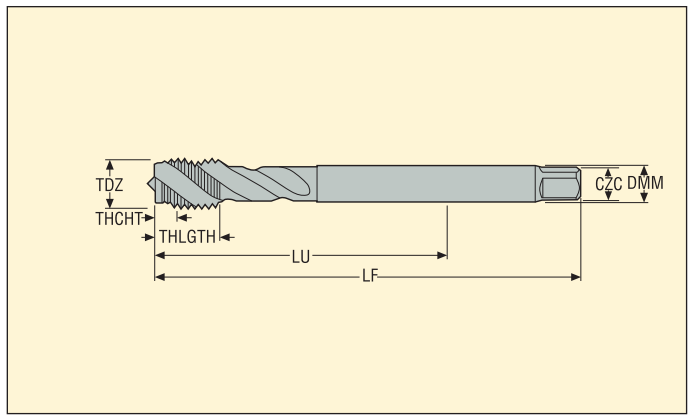

- For cutting data see page(s) 182
- Coating: TiN
- Substrate: HSS-E-PM

Designation	TDZ	Pitch		Dimensions in mm					NOF	PHDR	BSG	TCTR	THCHT
		mm	TPI	DMM	LU	THLGTH	LF	CZC					
MTH-M22X1.50ISO6H-BC-V038	MF22X1.5	1,50	–	18,0	78,0	17,0	125,0	18.00X14.50	4	20,5	DIN374	6H	C
MTH-M24X1.50ISO6H-BC-V038	MF24X1.5	1,50	–	18,0	93,0	20,0	140,0	18.00X14.50	4	22,5	DIN374	6H	C
MTH-M24X2.00ISO6H-BC-V038	MF24X2.0	2,00	–	18,0	93,0	20,0	140,0	18.00X14.50	4	22,0	DIN374	6H	C
MTH-M25X1.50ISO6H-BC-V038	MF25X1.5	1,50	–	18,0	93,0	20,0	140,0	18.00X14.50	4	23,5	DIN374	6H	C
MTH-M26X1.50ISO6H-BC-V038	MF26X1.5	1,50	–	18,0	93,0	20,0	140,0	18.00X14.50	4	24,5	DIN374	6H	C
MTH-M27X1.50ISO6H-BC-V038	MF27X1.5	1,50	–	20,0	77,0	20,0	140,0	20.00X16.00	4	25,5	DIN374	6H	C
MTH-M27X2.00ISO6H-BC-V038	MF27X2.0	2,00	–	20,0	77,0	20,0	140,0	20.00X16.00	4	25,0	DIN374	6H	C
MTH-M28X1.50ISO6H-BC-V038	MF28X1.5	1,50	–	20,0	77,0	20,0	140,0	20.00X16.00	4	26,5	DIN374	6H	C
MTH-M30X1.50ISO6H-BC-V038	MF30X1.5	1,50	–	22,0	85,0	20,0	150,0	22.00X18.00	4	28,5	DIN374	6H	C
MTH-M30X2.00ISO6H-BC-V038	MF30X2.0	2,00	–	22,0	85,0	20,0	150,0	22.00X18.00	4	28,0	DIN374	6H	C

Please check availability in current price and stock-list

MTH-V038-A

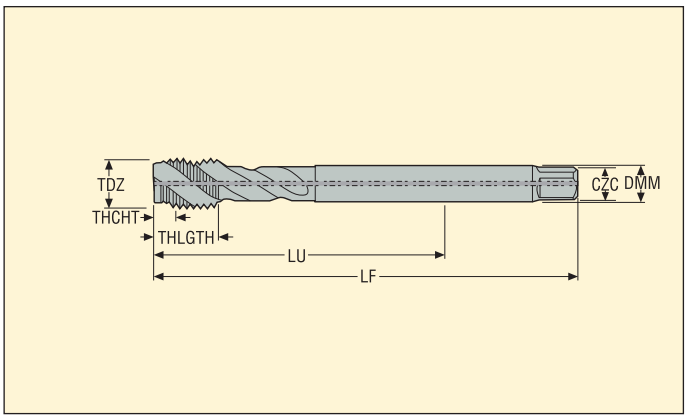

- For cutting data see page(s) 182
- Coating: TiN
- Substrate: HSS-PM ≤ M16, HSS-E > M16
- Internal coolant

Designation	TDZ	Pitch		Dimensions in mm					NOF	PHDR	BSG	TCTR	THCHT
		mm	TPI	DMM	LU	THLGTH	LF	CZC					
MTH-M6X0.75ISO6H-BC-V038-A	MF6X0.75	0,75	–	4,5	59,0	10,0	80,0	4.50X3.40	3	5,3	DIN374	6H	C
MTH-M8X0.75ISO6H-BC-V038-A	MF8X0.75	0,75	–	6,0	57,0	13,0	80,0	6.00X4.90	3	7,3	DIN374	6H	C
MTH-M8X1.00ISO6H-BC-V038-A	MF8X1.0	1,00	–	6,0	67,0	13,0	90,0	6.00X4.90	3	7,1	DIN374	6H	C
MTH-M10X0.75ISO6H-BC-V038-A	MF10X0.75	0,75	–	7,0	67,0	13,0	90,0	7.00X5.50	3	9,3	DIN374	6H	C
MTH-M10X1.00ISO6H-BC-V038-A	MF10X1.0	1,00	–	7,0	67,0	13,0	90,0	7.00X5.50	3	9,1	DIN374	6H	C
MTH-M10X1.25ISO6H-BC-V038-A	MF10X1.25	1,25	–	7,0	77,0	15,0	100,0	7.00X5.50	3	8,8	DIN374	6H	C
MTH-M12X1.00ISO6H-BC-V038-A	MF12X1.0	1,00	–	9,0	73,0	15,0	100,0	9.00X7.00	3	11,1	DIN374	6H	C
MTH-M12X1.25ISO6H-BC-V038-A	MF12X1.25	1,25	–	9,0	73,0	15,0	100,0	9.00X7.00	3	10,8	DIN374	6H	C
MTH-M12X1.50ISO6H-BC-V038-A	MF12X1.5	1,50	–	9,0	73,0	15,0	100,0	9.00X7.00	3	10,6	DIN374	6H	C
MTH-M14X1.00ISO6H-BC-V038-A	MF14X1.0	1,00	–	11,0	71,0	15,0	100,0	11.00X9.00	3	13,1	DIN374	6H	C
MTH-M14X1.25ISO6H-BC-V038-A	MF14X1.25	1,25	–	11,0	71,0	15,0	100,0	11.00X9.00	3	12,8	DIN374	6H	C
MTH-M14X1.50ISO6H-BC-V038-A	MF14X1.5	1,50	–	11,0	71,0	15,0	100,0	11.00X9.00	3	12,6	DIN374	6H	C
MTH-M16X1.00ISO6H-BC-V038-A	MF16X1.0	1,00	–	12,0	58,0	15,0	100,0	12.00X9.00	4	15,1	DIN374	6H	C
MTH-M16X1.50ISO6H-BC-V038-A	MF16X1.5	1,50	–	12,0	58,0	15,0	100,0	12.00X9.00	4	14,6	DIN374	6H	C
MTH-M18X1.00ISO6H-BC-V038-A	MF18X1.0	1,00	–	14,0	66,0	17,0	110,0	14.00X11.00	4	17,1	DIN374	6H	C
MTH-M18X1.50ISO6H-BC-V038-A	MF18X1.5	1,50	–	14,0	66,0	17,0	110,0	14.00X11.00	4	16,6	DIN374	6H	C
MTH-M20X1.00ISO6H-BC-V038-A	MF20X1.0	1,00	–	16,0	80,0	17,0	125,0	16.00X12.00	4	19,1	DIN374	6H	C
MTH-M20X1.50ISO6H-BC-V038-A	MF20X1.5	1,50	–	16,0	80,0	17,0	125,0	16.00X12.00	4	18,6	DIN374	6H	C
MTH-M22X1.50ISO6H-BC-V038-A	MF22X1.5	1,50	–	18,0	78,0	17,0	125,0	18.00X14.50	4	20,5	DIN374	6H	C
MTH-M24X1.50ISO6H-BC-V038-A	MF24X1.5	1,50	–	18,0	93,0	20,0	140,0	18.00X14.50	4	22,5	DIN374	6H	C
MTH-M24X2.00ISO6H-BC-V038-A	MF24X2.0	2,00	–	18,0	93,0	20,0	140,0	18.00X14.50	4	22,0	DIN374	6H	C
MTH-M25X1.50ISO6H-BC-V038-A	MF25X1.5	1,50	–	18,0	93,0	20,0	140,0	18.00X14.50	4	23,5	DIN374	6H	C
MTH-M26X1.50ISO6H-BC-V038-A	MF26X1.5	1,50	–	18,0	93,0	20,0	140,0	18.00X14.50	4	24,5	DIN374	6H	C
MTH-M27X1.50ISO6H-BC-V038-A	MF27X1.5	1,50	–	20,0	77,0	20,0	140,0	20.00X16.00	4	25,5	DIN374	6H	C

Please check availability in current price and stock-list

MTH-V038-A

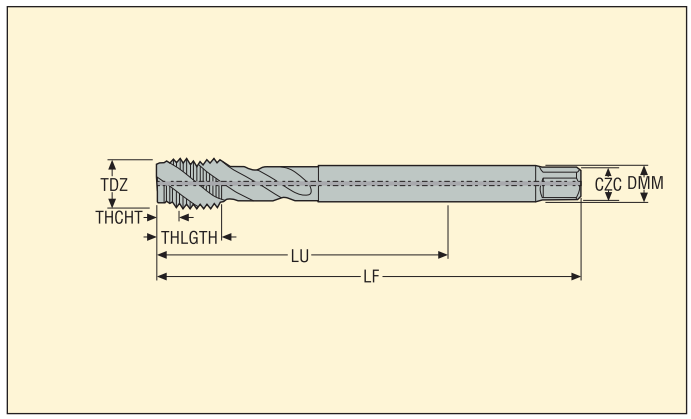

- For cutting data see page(s) 182
- Coating: TiN
- Substrate: HSS-PM ≤ M16, HSS-E > M16
- Internal coolant

Designation	TDZ	Pitch		Dimensions in mm					NOF	PHDR	BSG	TCTR	THCHT
		mm	TPI	DMM	LU	THLGTH	LF	CZC					
MTH-M27X2.00ISO6H-BC-V038-A	MF27X2.0	2,00	–	20,0	77,0	20,0	140,0	20.00X16.00	4	25,0	DIN374	6H	C
MTH-M28X1.50ISO6H-BC-V038-A	MF28X1.5	1,50	–	20,0	77,0	20,0	140,0	20.00X16.00	4	26,5	DIN374	6H	C
MTH-M30X1.50ISO6H-BC-V038-A	MF30X1.5	1,50	–	22,0	85,0	20,0	150,0	22.00X18.00	4	28,5	DIN374	6H	C
MTH-M30X2.00ISO6H-BC-V038-A	MF30X2.0	2,00	–	22,0	85,0	20,0	150,0	22.00X18.00	4	28,0	DIN374	6H	C

Please check availability in current price and stock-list

MTH-V040

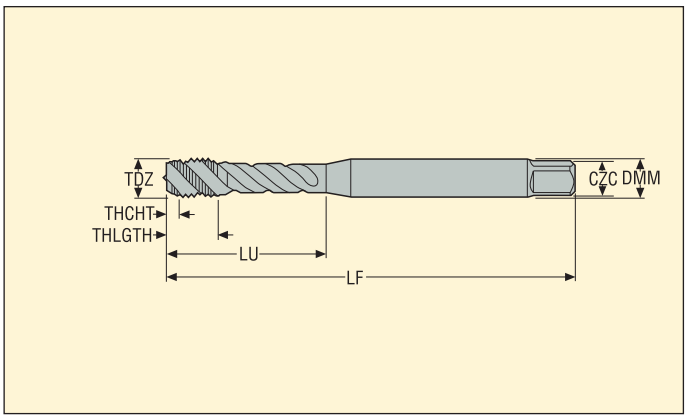

- For cutting data see page(s) 182
- Coating: TiN
- Substrate: HSS-PM

Designation	TDZ	Pitch		Dimensions in mm					NOF	PHDR	BSG	TCTR	THCHT
		mm	TPI	DMM	LU	THLGTH	LF	CZC					
MTH-4-40UNC-BC-V040	UNC4-40	–	40	3,5	18,0	5,6	56,0	3.50X2.70	3	2,35	DIN2184-1	2B	C
MTH-5-40UNC-BC-V040	UNC5-40	–	40	3,5	18,0	5,6	56,0	3.50X2.70	3	2,65	DIN2184-1	2B	C
MTH-6-32UNC-BC-V040	UNC6-32	–	32	4,0	20,0	6,5	56,0	4.00X3.00	3	2,85	DIN2184-1	2B	C
MTH-8-32UNC-BC-V040	UNC8-32	–	32	4,5	21,0	6,5	63,0	4.50X3.40	3	3,5	DIN2184-1	2B	C
MTH-10-24UNC-BC-V040	UNC10-24	–	24	6,0	25,0	7,3	70,0	6.00X4.90	3	3,9	DIN2184-1	2B	C
MTH-12-24UNC-BC-V040	UNC12-24	–	24	6,0	30,0	10,0	80,0	6.00X4.90	3	4,5	DIN2184-1	2B	C
MTH-1/4-20UNC-BC-V040	UNC1/4-20	–	20	7,0	30,0	10,0	80,0	7.00X5.50	3	5,2	DIN2184-1	2B	C
MTH-5/16-18UNC-BC-V040	UNC5/16-18	–	18	8,0	35,0	12,0	90,0	8.00X6.20	3	6,7	DIN2184-1	2B	C
MTH-3/8-16UNC-BC-V040	UNC3/8-16	–	16	10,0	39,0	15,0	100,0	10.00X8.00	3	8,1	DIN2184-1	2B	C
MTH-7/16-14UNC-BC-V040	UNC7/16-14	–	14	8,0	75,75	15,0	100,0	8.00X6.20	3	9,5	DIN2184-1	2B	C
MTH-1/2-13UNC-BC-V040	UNC1/2-13	–	13	9,0	82,75	18,0	110,0	9.00X7.00	3	10,9	DIN2184-1	2B	C
MTH-5/8-11UNC-BC-V040	UNC5/8-11	–	11	12,0	67,75	20,0	110,0	12.00X9.00	4	13,8	DIN2184-1	2B	C

Please check availability in current price and stock-list

MTH-V043

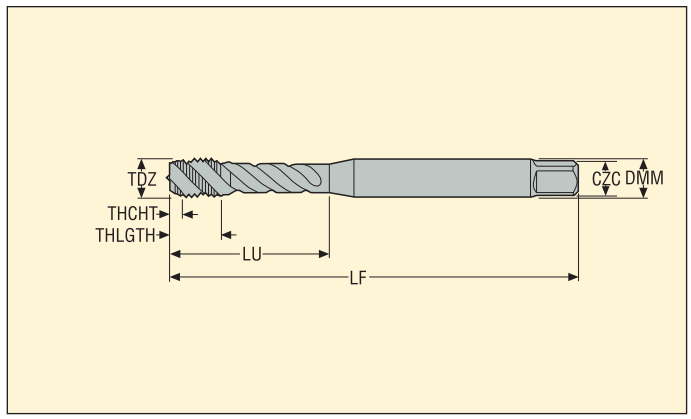

- For cutting data see page(s) 182
- Coating: TiN
- Substrate: HSS-PM

Designation	TDZ	Pitch		Dimensions in mm					NOF	PHDR	BSG	TCTR	THCHT
		mm	TPI	DMM	LU	THLGTH	LF	CZC					
MTH-8-36UNF-BC-V043	UNF8-36	–	36	4,5	21,0	6,5	63,0	4.50X3.40	3	3,5	DIN2184-1	2B	C
MTH-10-32UNF-BC-V043	UNF10-32	–	32	6,0	25,0	7,3	70,0	6.00X4.90	3	4,1	DIN2184-1	2B	C
MTH-1/4-28UNF-BC-V043	UNF1/4-28	–	28	7,0	30,0	10,0	80,0	7.00X5.50	3	5,5	DIN2184-1	2B	C
MTH-5/16-24UNF-BC-V043	UNF5/16-24	–	24	8,0	35,0	12,0	90,0	8.00X6.20	3	7,0	DIN2184-1	2B	C
MTH-3/8-24UNF-BC-V043	UNF3/8-24	–	24	10,0	39,0	15,0	100,0	10.00X8.00	3	8,6	DIN2184-1	2B	C
MTH-7/16-20UNF-BC-V043	UNF7/16-20	–	20	8,0	75,75	15,0	100,0	8.00X6.20	3	10,0	DIN2184-1	2B	C
MTH-1/2-20UNF-BC-V043	UNF1/2-20	–	20	9,0	83,0	18,0	110,0	9.00X7.00	3	11,5	DIN2184-1	2B	C
MTH-5/8-18UNF-BC-V043	UNF5/8-18	–	18	12,0	67,75	20,0	110,0	12.00X9.00	4	14,6	DIN2184-1	2B	C
MTH-9/16-18UNF-BC-V043	UNF9/16-18	–	18	11,0	71,0	20,0	100,0	11.00X9.00	4	13,0	DIN2184-1	2B	C
MTH-3/4-16UNF-BC-V043	UNF3/4-16	–	16	14,0	77,5	25,0	125,0	14.00X11.00	4	17,6	DIN2184-1	2B	C
MTH-7/8-14UNF-BC-V043	UNF7/8-14	–	14	18,0	93,0	25,0	140,0	18.00X14.50	4	20,6	DIN2184-1	2B	C
MTH-1-12UNF-BC-V043	UNF1-12	–	12	18,0	113,0	30,0	160,0	18.00X14.50	4	23,5	DIN2184-1	2B	C

Please check availability in current price and stock-list

MTH-V045

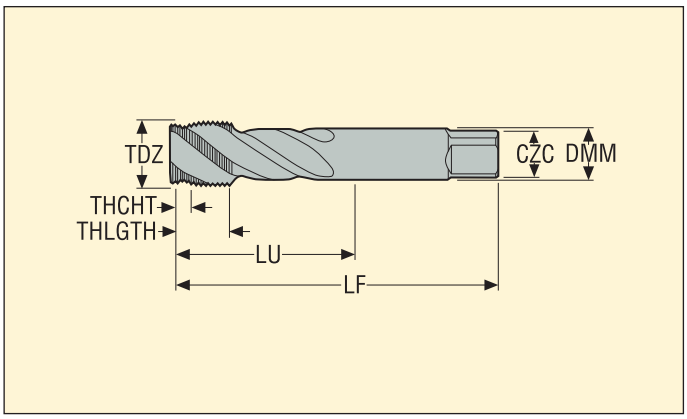

- For cutting data see page(s) 182
- Coating: TiN
- Substrate: HSS-PM ≤ G3/8, HSS-E > G3/8

Designation	TDZ	Pitch		Dimensions in mm					NOF	PHDR	BSG	TCTR	THCHT
		mm	TPI	DMM	LU	THLGTH	LF	CZC					
MTH-1/8-28G-BC-V045	G1/8-28	–	28	7,0	67,0	13,0	90,0	7.00X5.50	3	8,8	DIN5156	NORMAL	C
MTH-1/4-19G-BC-V045	G1/4-19	–	19	11,0	71,0	15,0	100,0	11.00X9.00	3	11,8	DIN5156	NORMAL	C
MTH-3/8-19G-BC-V045	G3/8-19	–	19	12,0	58,0	15,0	100,0	12.00X9.00	4	15,3	DIN5156	NORMAL	C
MTH-1/2-14G-BC-V045	G1/2-14	–	14	16,0	80,0	18,0	125,0	16.00X12.00	4	19,1	DIN5156	NORMAL	C
MTH-5/8-14G-BC-V045	G5/8-14	–	14	18,0	78,0	18,0	125,0	18.00X14.50	4	21,1	DIN5156	NORMAL	C
MTH-3/4-14G-BC-V045	G3/4-14	–	14	20,0	77,0	20,0	140,0	20.00X16.00	4	24,6	DIN5156	NORMAL	C
MTH-7/8-14G-BC-V045	G7/8-14	–	14	22,0	85,0	20,0	150,0	22.00X18.00	4	28,3	DIN5156	NORMAL	C
MTH-1-11G-BC-V045	G1-11	–	11	25,0	93,0	22,0	160,0	25.00X20.00	4	30,9	DIN5156	NORMAL	C
MTH-1.1/8-11G-BC-V045	G1.1/8-11	–	11	28,0	101,0	22,0	170,0	28.00X22.00	4	35,5	DIN5156	NORMAL	C
MTH-1.1/4-11G-BC-V045	G1.1/4-11	–	11	32,0	72,0	22,0	170,0	32.00X24.00	4	39,5	DIN5156	NORMAL	C
MTH-1.1/2-11G-BC-V045	G1.1/2-11	–	11	36,0	87,0	23,0	190,0	36.00X29.00	4	45,4	DIN5156	NORMAL	C

Please check availability in current price and stock-list

MTP-V001

Long version

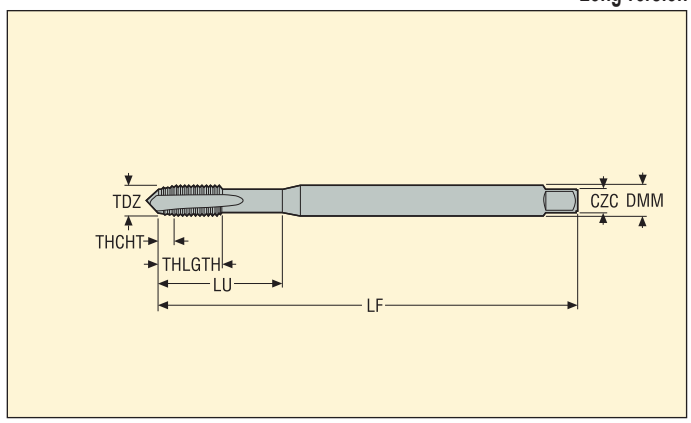

- For cutting data see page(s) 183
- Coating: TiN
- Substrate: HSS-E

Designation	TDZ	Pitch		Dimensions in mm					NOF	PHDR	BSG	TCTR	THCHT
		mm	TPI	DMM	LU	THLGTH	LF	CZC					
MTP-M3X0.50ISO6H-TB-V001	M3	0,50	–	3,5	18,0	9,0	112,0	3.50X2.70	3	2,5	DIN371	6H	B
MTP-M4X0.70ISO6H-TB-V001	M4	0,70	–	4,5	21,0	12,0	112,0	4.50X3.40	3	3,4	DIN371	6H	B
MTP-M5X0.80ISO6H-TB-V001	M5	0,80	–	6,0	25,0	13,0	125,0	6.00X4.90	3	4,3	DIN371	6H	B
MTP-M6X1.00ISO6H-TB-V001	M6	1,00	–	6,0	30,0	15,0	125,0	6.00X4.90	3	5,1	DIN371	6H	B
MTP-M8X1.25ISO6H-TB-V001	M8	1,25	–	8,0	40,0	18,0	140,0	8.00X6.20	3	6,8	DIN371	6H	B
MTP-M10X1.50ISO6H-TB-V001	M10	1,50	–	10,0	50,0	20,0	160,0	10.00X8.00	3	8,6	DIN371	6H	B

Please check availability in current price and stock-list

MTP-V002

Long version

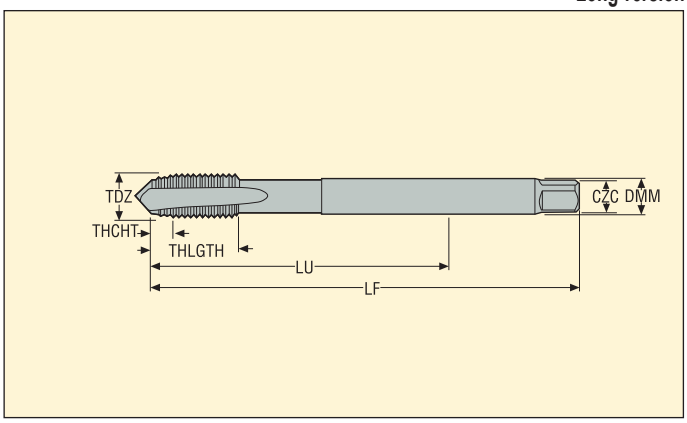

- For cutting data see page(s) 183
- Coating: TiN
- Substrate: HSS-E

Designation	TDZ	Pitch		Dimensions in mm					NOF	PHDR	BSG	TCTR	THCHT
		mm	TPI	DMM	LU	THLGTH	LF	CZC					
MTP-M12X1.75ISO6H-TB-V002	M12	1,75	–	9,0	153,0	23,0	180,0	9.00X7.00	3	10,4	DIN376	6H	B
MTP-M14X2.00ISO6H-TB-V002	M14	2,00	–	11,0	151,0	25,0	180,0	11.00X9.00	3	12,1	DIN376	6H	B
MTP-M16X2.00ISO6H-TB-V002	M16	2,00	–	12,0	158,0	25,0	200,0	12.00X9.00	3	14,1	DIN376	6H	B
MTP-M20X2.50ISO6H-TB-V002	M20	2,50	–	16,0	179,0	30,0	224,0	16.00X12.00	4	17,7	DIN376	6H	B

Please check availability in current price and stock-list

MTP-V005

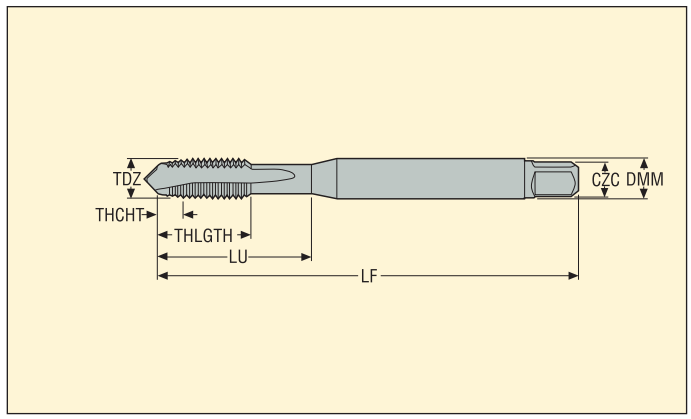

- For cutting data see page(s) 183
- Coating: TiN
- Substrate: HSS-PM

Designation	TDZ	Pitch		Dimensions in mm					NOF	PHDR	BSG	TCTR	THCHT
		mm	TPI	DMM	LU	THLGTH	LF	CZC					
MTP-M3X0.50ISO6G-TB-V005	M3	0,50	–	3,5	18,0	8,9	56,0	3.50X2.70	3	2,5	DIN371	6G	B
MTP-M4X0.70ISO6G-TB-V005	M4	0,70	–	4,5	21,0	11,7	63,0	4.50X3.40	3	3,4	DIN371	6G	B
MTP-M5X0.80ISO6G-TB-V005	M5	0,80	–	6,0	25,0	12,6	70,0	6.00X4.90	3	4,3	DIN371	6G	B
MTP-M6X1.00ISO6G-TB-V005	M6	1,00	–	6,0	30,0	14,5	80,0	6.00X4.90	3	5,1	DIN371	6G	B
MTP-M8X1.25ISO6G-TB-V005	M8	1,25	–	8,0	35,0	17,4	90,0	8.00X6.20	3	6,8	DIN371	6G	B
MTP-M10X1.50ISO6G-TB-V005	M10	1,50	–	10,0	39,0	19,2	100,0	10.00X8.00	3	8,6	DIN371	6G	B

Please check availability in current price and stock-list

MTP-V006

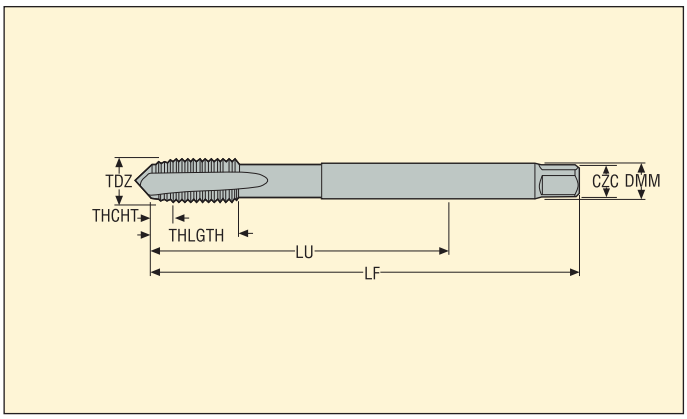

- For cutting data see page(s) 183
- Coating: TiN
- Substrate: HSS-PM ≤ M16, HSS-E > M16

Designation	TDZ	Pitch		Dimensions in mm					NOF	PHDR	BSG	TCTR	THCHT
		mm	TPI	DMM	LU	THLGTH	LF	CZC					
MTP-M12X1.75ISO6G-TB-V006	M12	1,75	–	9,0	83,0	23,0	110,0	9.00X7.00	3	10,4	DIN376	6G	B
MTP-M16X2.00ISO6G-TB-V006	M16	2,00	–	12,0	68,0	25,0	110,0	12.00X9.00	3	14,1	DIN376	6G	B
MTP-M20X2.50ISO6G-TB-V006	M20	2,50	–	16,0	95,0	30,0	140,0	16.00X12.00	4	17,7	DIN376	6G	B

Please check availability in current price and stock-list

MTP-V007

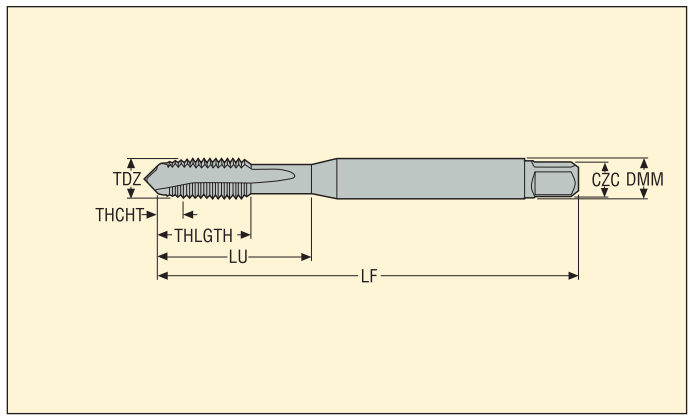

- For cutting data see page(s) 183
- Coating: TiN
- Substrate: HSS-E ≤ M2,5, HSS-PM > M2,5

Designation	TDZ	Pitch		Dimensions in mm					NOF	PHDR	BSG	TCTR	THCHT
		mm	TPI	DMM	LU	THLGTH	LF	CZC					
MTP-M2X0.40ISO6H-TB-V007	M2	0,40	–	2,8	9,0	6,0	45,0	2.80X2.10	2	1,6	DIN371	6H	B
MTP-M2.5X0.45ISO6H-TB-V007	M2.5	0,45	–	2,8	12,5	8,0	50,0	2.80X2.10	2	2,1	DIN371	6H	B
MTP-M3X0.50ISO6H-TB-V007	M3	0,50	–	3,5	18,0	8,9	56,0	3.50X2.70	3	2,5	DIN371	6H	B
MTP-M3.50X0.60ISO6H-TB-V007	M3.5	0,60	–	4,0	20,0	10,8	56,0	4.00X3.00	3	2,9	DIN371	6H	B
MTP-M4X0.70ISO6H-TB-V007	M4	0,70	–	4,5	21,0	11,7	63,0	4.50X3.40	3	3,4	DIN371	6H	B
MTP-M4.5X0.75ISO6H-TB-V007	M4.5	0,75	–	6,0	25,0	12,6	70,0	6.00X4.90	3	3,8	DIN371	6H	B
MTP-M5X0.80ISO6H-TB-V007	M5	0,80	–	6,0	25,0	12,6	70,0	6.00X4.90	3	4,3	DIN371	6H	B
MTP-M6X1.00ISO6H-TB-V007	M6	1,00	–	6,0	30,0	14,5	80,0	6.00X4.90	3	5,1	DIN371	6H	B
MTP-M7X1.00ISO6H-TB-V007	M7	1,00	–	7,0	30,0	14,5	80,0	7.00X5.50	3	6,1	DIN371	6H	B
MTP-M8X1.25ISO6H-TB-V007	M8	1,25	–	8,0	35,0	17,4	90,0	8.00X6.20	3	6,8	DIN371	6H	B
MTP-M10X1.50ISO6H-TB-V007	M10	1,50	–	10,0	39,0	19,2	100,0	10.00X8.00	3	8,6	DIN371	6H	B

Please check availability in current price and stock-list

MTP-V007-A

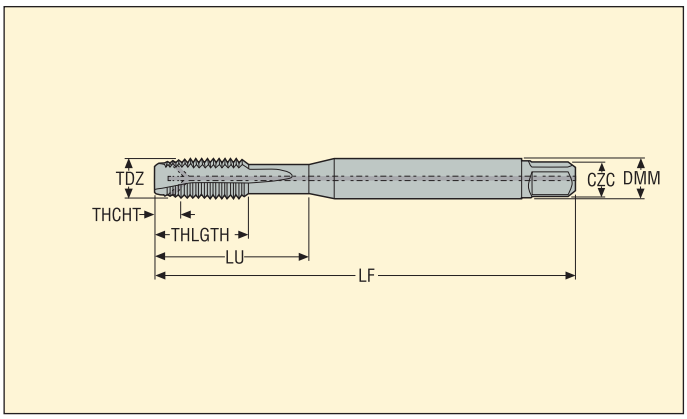

- For cutting data see page(s) 183
- Coating: TiN
- Substrate: HSS-PM
- Internal coolant

Designation	TDZ	Pitch		Dimensions in mm					NOF	PHDR	BSG	TCTR	THCHT
		mm	TPI	DMM	LU	THLGTH	LF	CZC					
MTP-M4X0.70ISO6H-TB-V007-A	M4	0,70	–	4,5	21,0	6,7	63,0	4.50X3.40	3	3,4	DIN371	6H	B
MTP-M5X0.80ISO6H-TB-V007-A	M5	0,80	–	6,0	25,0	7,7	70,0	6.00X4.90	3	4,3	DIN371	6H	B
MTP-M6X1.00ISO6H-TB-V007-A	M6	1,00	–	6,0	30,0	10,0	80,0	6.00X4.90	3	5,1	DIN371	6H	B
MTP-M8X1.25ISO6H-TB-V007-A	M8	1,25	–	8,0	35,0	11,6	90,0	8.00X6.20	3	6,8	DIN371	6H	B
MTP-M10X1.50ISO6H-TB-V007-A	M10	1,50	–	10,0	39,0	15,1	100,0	10.00X8.00	3	8,6	DIN371	6H	B

Please check availability in current price and stock-list

MTP-V008

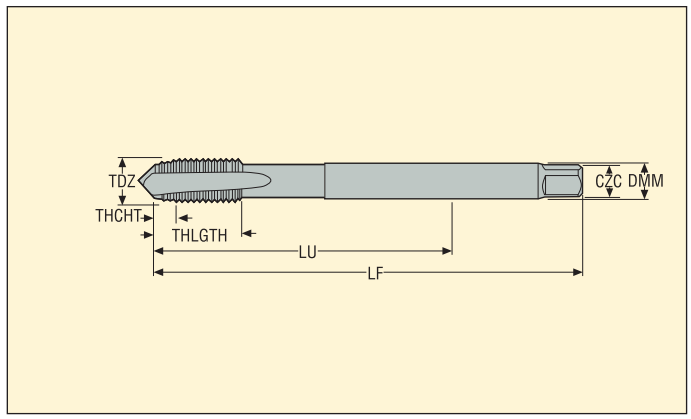

- For cutting data see page(s) 183
- Coating: TiN
- Substrate: HSS-PM ≤ M16, HSS-E > M16

Designation	TDZ	Pitch		Dimensions in mm					NOF	PHDR	BSG	TCTR	THCHT
		mm	TPI	DMM	LU	THLGTH	LF	CZC					
MTP-M3X0.50ISO6H-TB-V008	M3	0,50	–	2,2	37,0	9,5	56,0	2.20X1.80	3	2,5	DIN376	6H	B
MTP-M4X0.70ISO6H-TB-V008	M4	0,70	–	2,8	43,0	11,9	63,0	2.80X2.10	3	3,4	DIN376	6H	B
MTP-M5X0.80ISO6H-TB-V008	M5	0,80	–	3,5	49,0	13,2	70,0	3.50X2.70	3	4,3	DIN376	6H	B
MTP-M6X1.00ISO6H-TB-V008	M6	1,00	–	4,5	59,0	15,1	80,0	4.50X3.40	3	5,1	DIN376	6H	B
MTP-M8X1.25ISO6H-TB-V008	M8	1,25	–	6,0	67,0	18,0	90,0	6.00X4.90	3	6,8	DIN376	6H	B
MTP-M10X1.50ISO6H-TB-V008	M10	1,50	–	7,0	77,0	19,8	100,0	7.00X5.50	3	8,6	DIN376	6H	B
MTP-M12X1.75ISO6H-TB-V008	M12	1,75	–	9,0	83,0	23,0	110,0	9.00X7.00	3	10,4	DIN376	6H	B
MTP-M14X2.00ISO6H-TB-V008	M14	2,00	–	11,0	81,0	25,0	110,0	11.00X9.00	3	12,1	DIN376	6H	B
MTP-M16X2.00ISO6H-TB-V008	M16	2,00	–	12,0	68,0	25,0	110,0	12.00X9.00	3	14,1	DIN376	6H	B
MTP-M18X2.50ISO6H-TB-V008	M18	2,50	–	14,0	81,0	30,0	125,0	14.00X11.00	4	15,7	DIN376	6H	B
MTP-M20X2.50ISO6H-TB-V008	M20	2,50	–	16,0	95,0	30,0	140,0	16.00X12.00	4	17,7	DIN376	6H	B
MTP-M22X2.50ISO6H-TB-V008	M22	2,50	–	18,0	93,0	34,0	140,0	18.00X14.50	4	19,7	DIN376	6H	B
MTP-M24X3.00ISO6H-TB-V008	M24	3,00	–	18,0	113,0	38,0	160,0	18.00X14.50	4	21,0	DIN376	6H	B
MTP-M27X3.00ISO6H-TB-V008	M27	3,00	–	20,0	97,0	38,0	160,0	20.00X16.00	4	24,0	DIN376	6H	B
MTP-M30X3.50ISO6H-TB-V008	M30	3,50	–	22,0	115,0	45,0	180,0	22.00X18.00	4	26,5	DIN376	6H	B
MTP-M33X3.50ISO6H-TB-V008	M33	3,50	–	25,0	113,0	50,0	180,0	25.00X20.00	4	29,5	DIN376	6H	B
MTP-M36X4.00ISO6H-TB-V008	M36	4,00	–	28,0	131,0	55,0	200,0	28.00X22.00	4	32,0	DIN376	6H	B

Please check availability in current price and stock-list

MTP-V008-A

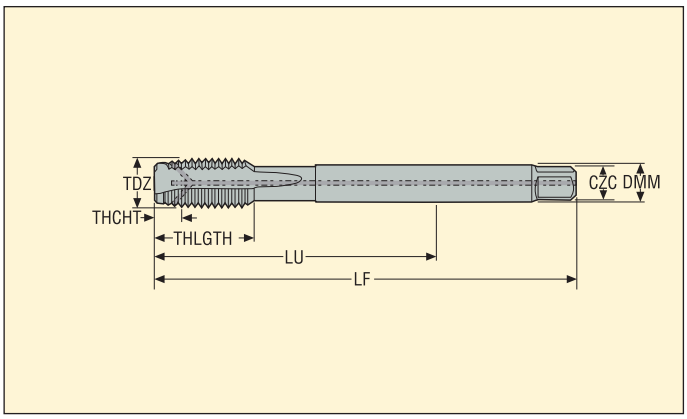

- For cutting data see page(s) 183
- Coating: TiN
- Substrate: HSS-PM ≤ M16, HSS-E > M16
- Internal coolant

Designation	TDZ	Pitch		Dimensions in mm					NOF	PHDR	BSG	TCTR	THCHT
		mm	TPI	DMM	LU	THLGTH	LF	CZC					
MTP-M12X1.75ISO6H-TB-V008-A	M12	1,75	–	9,0	83,0	16,0	110,0	9.00X7.00	3	10,4	DIN376	6H	B
MTP-M14X2.00ISO6H-TB-V008-A	M14	2,00	–	11,0	81,0	25,0	110,0	11.00X9.00	3	12,1	DIN376	6H	B
MTP-M16X2.00ISO6H-TB-V008-A	M16	2,00	–	12,0	68,0	20,0	110,0	12.00X9.00	4	14,1	DIN376	6H	B
MTP-M18X2.50ISO6H-TB-V008-A	M18	2,50	–	14,0	81,0	25,0	125,0	14.00X11.00	4	15,7	DIN376	6H	B
MTP-M20X2.50ISO6H-TB-V008-A	M20	2,50	–	16,0	95,0	25,0	140,0	16.00X12.00	4	17,7	DIN376	6H	B
MTP-M22X2.50ISO6H-TB-V008-A	M22	2,50	–	18,0	93,0	25,0	140,0	18.00X14.50	4	19,7	DIN376	6H	B
MTP-M24X3.00ISO6H-TB-V008-A	M24	3,00	–	18,0	113,0	30,0	160,0	18.00X14.50	4	21,0	DIN376	6H	B
MTP-M27X3.00ISO6H-TB-V008-A	M27	3,00	–	20,0	97,0	30,0	160,0	20.00X16.00	4	24,0	DIN376	6H	B
MTP-M30X3.50ISO6H-TB-V008-A	M30	3,50	–	22,0	115,0	36,0	180,0	22.00X18.00	4	26,5	DIN376	6H	B
MTP-M33X3.50ISO6H-TB-V008-A	M33	3,50	–	25,0	113,0	50,0	180,0	25.00X20.00	4	29,5	DIN376	6H	B
MTP-M36X4.00ISO6H-TB-V008-A	M36	4,00	–	28,0	131,0	55,0	200,0	28.00X22.00	4	32,0	DIN376	6H	B

Please check availability in current price and stock-list

MTP-V014

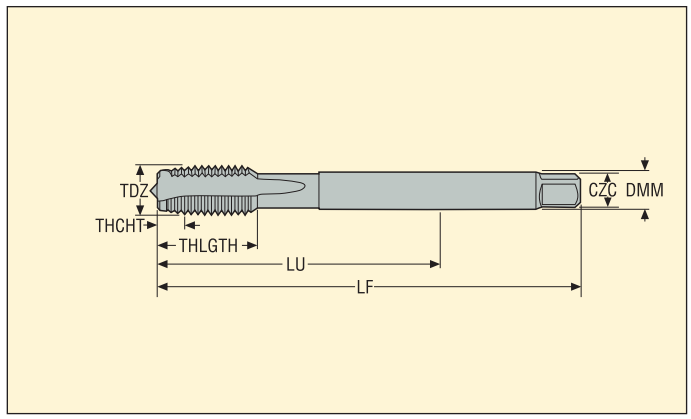

- For cutting data see page(s) 184
- Coating: TiN
- Substrate: HSS-PM ≤ M16, HSS-E > M16

Designation	TDZ	Pitch		Dimensions in mm					NOF	PHDR	BSG	TCTR	THCHT
		mm	TPI	DMM	LU	THLGTH	LF	CZC					
MTP-M4X0.50ISO6H-TB-V014	MF4X0.5	0,50	–	2,8	43,0	11,9	63,0	2.80X2.10	3	3,5	DIN374	6H	B
MTP-M5X0.50ISO6H-TB-V014	MF5X0.5	0,50	–	3,5	49,0	13,2	70,0	3.50X2.70	3	4,5	DIN374	6H	B
MTP-M6X0.75ISO6H-TB-V014	MF6X0.75	0,75	–	4,5	59,0	15,1	80,0	4.50X3.40	3	5,3	DIN374	6H	B
MTP-M8X0.75ISO6H-TB-V014	MF8X0.75	0,75	–	6,0	57,0	14,9	80,0	6.00X4.90	3	7,3	DIN374	6H	B
MTP-M8X1.00ISO6H-TB-V014	MF8X1.0	1,00	–	6,0	67,0	18,0	90,0	6.00X4.90	3	7,1	DIN374	6H	B
MTP-M9X1.00ISO6H-TB-V014	MF9X1.0	1,00	–	7,0	67,0	17,0	90,0	7.00X5.50	3	8,1	DIN374	6H	B
MTP-M10X0.75ISO6H-TB-V014	MF10X0.75	0,75	–	7,0	67,0	17,6	90,0	7.00X5.50	3	9,3	DIN374	6H	B
MTP-M10X1.00ISO6H-TB-V014	MF10X1.0	1,00	–	7,0	67,0	17,6	90,0	7.00X5.50	3	9,1	DIN374	6H	B
MTP-M10X1.25ISO6H-TB-V014	MF10X1.25	1,25	–	7,0	77,0	19,8	100,0	7.00X5.50	3	8,8	DIN374	6H	B
MTP-M11X1.00ISO6H-TB-V014	MF11X1.0	1,00	–	8,0	63,0	18,0	90,0	8.00X6.20	3	10,1	DIN374	6H	B
MTP-M11X1.25ISO6H-TB-V014	MF11X1.25	1,25	–	8,0	63,0	22,0	90,0	8.00X6.20	3	9,8	DIN374	6H	B
MTP-M12X1.00ISO6H-TB-V014	MF12X1.0	1,00	–	9,0	73,0	21,0	100,0	9.00X7.00	3	11,1	DIN374	6H	B
MTP-M12X1.25ISO6H-TB-V014	MF12X1.25	1,25	–	9,0	73,0	21,0	100,0	9.00X7.00	3	10,8	DIN374	6H	B
MTP-M12X1.50ISO6H-TB-V014	MF12X1.5	1,50	–	9,0	73,0	21,0	100,0	9.00X7.00	3	10,6	DIN374	6H	B
MTP-M14X1.00ISO6H-TB-V014	MF14X1.0	1,00	–	11,0	71,0	21,0	100,0	11.00X9.00	3	13,1	DIN374	6H	B
MTP-M14X1.25ISO6H-TB-V014	MF14X1.25	1,25	–	11,0	71,0	21,0	100,0	11.00X9.00	3	12,8	DIN374	6H	B
MTP-M14X1.50ISO6H-TB-V014	MF14X1.5	1,50	–	11,0	71,0	21,0	100,0	11.00X9.00	3	12,6	DIN374	6H	B
MTP-M16X1.00ISO6H-TB-V014	MF16X1.0	1,00	–	12,0	58,0	21,0	100,0	12.00X9.00	3	15,1	DIN374	6H	B
MTP-M16X1.50ISO6H-TB-V014	MF16X1.5	1,50	–	12,0	58,0	21,0	100,0	12.00X9.00	3	14,6	DIN374	6H	B
MTP-M18X1.00ISO6H-TB-V014	MF18X1.0	1,00	–	14,0	66,0	24,0	110,0	14.00X11.00	4	17,1	DIN374	6H	B
MTP-M18X1.50ISO6H-TB-V014	MF18X1.5	1,50	–	14,0	66,0	24,0	110,0	14.00X11.00	4	16,6	DIN374	6H	B
MTP-M20X1.00ISO6H-TB-V014	MF20X1.0	1,00	–	16,0	80,0	24,0	125,0	16.00X12.00	4	19,1	DIN374	6H	B
MTP-M20X1.50ISO6H-TB-V014	MF20X1.5	1,50	–	16,0	80,0	24,0	125,0	16.00X12.00	4	18,6	DIN374	6H	B

Please check availability in current price and stock-list

MTP-V014

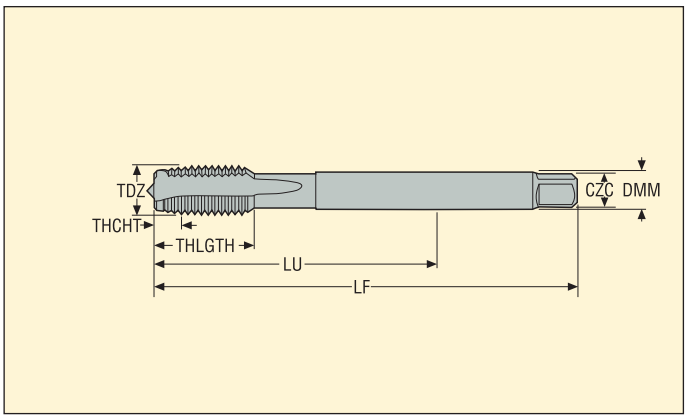

- For cutting data see page(s) 184
- Coating: TiN
- Substrate: HSS-PM ≤ M16, HSS-E > M16

Designation	TDZ	Pitch		Dimensions in mm					NOF	PHDR	BSG	TCTR	THCHT
		mm	TPI	DMM	LU	THLGTH	LF	CZC					
MTP-M22X1.50ISO6H-TB-V014	MF22X1.5	1,50	–	18,0	78,0	25,0	125,0	18.00X14.50	4	20,5	DIN374	6H	B
MTP-M24X1.50ISO6H-TB-V014	MF24X1.5	1,50	–	18,0	93,0	28,0	140,0	18.00X14.50	4	22,5	DIN374	6H	B
MTP-M24X2.00ISO6H-TB-V014	MF24X2.0	2,00	–	18,0	93,0	28,0	140,0	18.00X14.50	4	22,0	DIN374	6H	B
MTP-M25X1.50ISO6H-TB-V014	MF25X1.5	1,50	–	18,0	93,0	28,0	140,0	18.00X14.50	4	23,5	DIN374	6H	B
MTP-M26X1.50ISO6H-TB-V014	MF26X1.5	1,50	–	18,0	93,0	28,0	140,0	18.00X14.50	4	24,5	DIN374	6H	B
MTP-M27X1.50ISO6H-TB-V014	MF27X1.5	1,50	–	20,0	77,0	28,0	140,0	20.00X16.00	4	25,5	DIN374	6H	B
MTP-M27X2.00ISO6H-TB-V014	MF27X2.0	2,00	–	20,0	77,0	28,0	140,0	20.00X16.00	4	25,0	DIN374	6H	B
MTP-M28X1.50ISO6H-TB-V014	MF28X1.5	1,50	–	20,0	77,0	28,0	140,0	20.00X16.00	4	26,5	DIN374	6H	B
MTP-M30X1.50ISO6H-TB-V014	MF30X1.5	1,50	–	22,0	85,0	28,0	150,0	22.00X18.00	4	28,5	DIN374	6H	B
MTP-M30X2.00ISO6H-TB-V014	MF30X2.0	2,00	–	22,0	85,0	28,0	150,0	22.00X18.00	4	28,0	DIN374	6H	B

Please check availability in current price and stock-list

MTP-V014-A

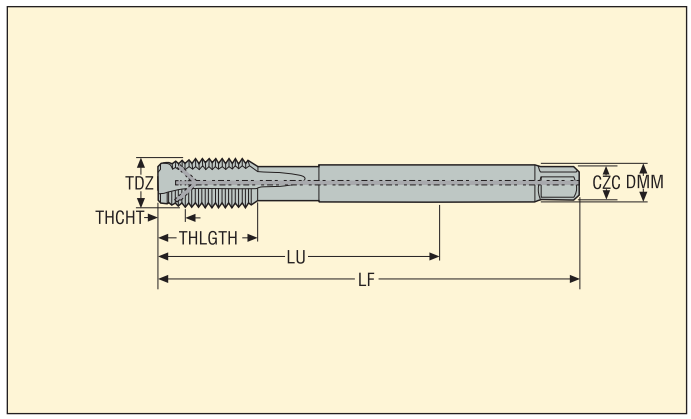

- For cutting data see page(s) 184
- Coating: TiN
- Substrate: HSS-PM ≤ M16, HSS-E > M16
- Internal coolant

Designation	TDZ	Pitch		Dimensions in mm					NOF	PHDR	BSG	TCTR	THCHT
		mm	TPI	DMM	LU	THLGTH	LF	CZC					
MTP-M6X0.75ISO6H-TB-V014-A	MF6X0.75	0,75	–	4,5	59,0	15,1	80,0	4.50X3.40	3	5,3	DIN374	6H	B
MTP-M8X0.75ISO6H-TB-V014-A	MF8X0.75	0,75	–	6,0	57,0	14,9	80,0	6.00X4.90	3	7,3	DIN374	6H	B
MTP-M8X1.00ISO6H-TB-V014-A	MF8X1.0	1,00	–	6,0	67,0	18,0	90,0	6.00X4.90	3	7,1	DIN374	6H	B
MTP-M10X0.75ISO6H-TB-V014-A	MF10X0.75	0,75	–	7,0	67,0	17,6	90,0	7.00X5.50	3	9,3	DIN374	6H	B
MTP-M10X1.00ISO6H-TB-V014-A	MF10X1.0	1,00	–	7,0	67,0	17,6	90,0	7.00X5.50	3	9,1	DIN374	6H	B
MTP-M10X1.25ISO6H-TB-V014-A	MF10X1.25	1,25	–	7,0	77,0	19,8	100,0	7.00X5.50	3	8,8	DIN374	6H	B
MTP-M12X1.00ISO6H-TB-V014-A	MF12X1.0	1,00	–	9,0	73,0	21,0	100,0	9.00X7.00	3	11,1	DIN374	6H	B
MTP-M12X1.25ISO6H-TB-V014-A	MF12X1.25	1,25	–	9,0	73,0	21,0	100,0	9.00X7.00	3	10,8	DIN374	6H	B
MTP-M12X1.50ISO6H-TB-V014-A	MF12X1.5	1,50	–	9,0	73,0	21,0	100,0	9.00X7.00	3	10,6	DIN374	6H	B
MTP-M14X1.00ISO6H-TB-V014-A	MF14X1.0	1,00	–	11,0	71,0	21,0	100,0	11.00X9.00	3	13,1	DIN374	6H	B
MTP-M14X1.25ISO6H-TB-V014-A	MF14X1.25	1,25	–	11,0	71,0	21,0	100,0	11.00X9.00	3	12,8	DIN374	6H	B
MTP-M14X1.50ISO6H-TB-V014-A	MF14X1.5	1,50	–	11,0	71,0	21,0	100,0	11.00X9.00	3	12,6	DIN374	6H	B
MTP-M16X1.00ISO6H-TB-V014-A	MF16X1.0	1,00	–	12,0	58,0	21,0	100,0	12.00X9.00	3	15,1	DIN374	6H	B
MTP-M16X1.50ISO6H-TB-V014-A	MF16X1.5	1,50	–	12,0	58,0	21,0	100,0	12.00X9.00	3	14,6	DIN374	6H	B
MTP-M18X1.00ISO6H-TB-V014-A	MF18X1.0	1,00	–	14,0	66,0	24,0	110,0	14.00X11.00	4	17,1	DIN374	6H	B
MTP-M18X1.50ISO6H-TB-V014-A	MF18X1.5	1,50	–	14,0	66,0	24,0	110,0	14.00X11.00	4	16,6	DIN374	6H	B
MTP-M20X1.00ISO6H-TB-V014-A	MF20X1.0	1,00	–	16,0	80,0	24,0	125,0	16.00X12.00	4	19,1	DIN374	6H	B
MTP-M20X1.50ISO6H-TB-V014-A	MF20X1.5	1,50	–	16,0	80,0	24,0	125,0	16.00X12.00	4	18,6	DIN374	6H	B
MTP-M22X1.50ISO6H-TB-V014-A	MF22X1.5	1,50	–	18,0	78,0	25,0	125,0	18.00X14.50	4	20,5	DIN374	6H	B
MTP-M24X1.50ISO6H-TB-V014-A	MF24X1.5	1,50	–	18,0	93,0	28,0	140,0	18.00X14.50	4	22,5	DIN374	6H	B
MTP-M24X2.00ISO6H-TB-V014-A	MF24X2.0	2,00	–	18,0	93,0	28,0	140,0	18.00X14.50	4	22,0	DIN374	6H	B

Please check availability in current price and stock-list

MTP-V017

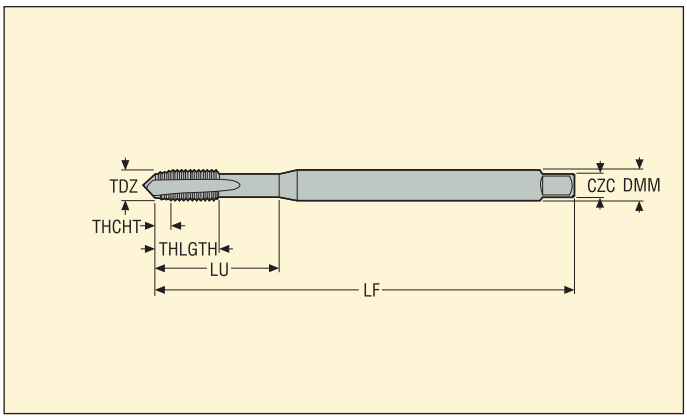

- For cutting data see page(s) 184
- Coating: TiN
- Substrate: HSS-PM

Designation	TDZ	Pitch		Dimensions in mm					NOF	PHDR	BSG	TCTR	THCHT
		mm	TPI	DMM	LU	THLGTH	LF	CZC					
MTP-4-40UNC-TB-V017	UNC4-40	–	40	3,5	18,0	8,5	56,0	3.50X2.70	3	2,35	DIN2184-1	2B	B
MTP-5-40UNC-TB-V017	UNC5-40	–	40	3,5	18,0	9,5	56,0	3.50X2.70	3	2,65	DIN2184-1	2B	B
MTP-6-32UNC-TB-V017	UNC6-32	–	32	4,0	20,0	10,4	56,0	4.00X3.00	3	2,85	DIN2184-1	2B	B
MTP-8-32UNC-TB-V017	UNC8-32	–	32	4,5	21,0	11,4	63,0	4.50X3.40	3	3,5	DIN2184-1	2B	B
MTP-10-24UNC-TB-V017	UNC10-24	–	24	6,0	25,0	12,2	70,0	6.00X4.90	3	3,9	DIN2184-1	2B	B
MTP-12-24UNC-TB-V017	UNC12-24	–	24	6,0	30,0	14,2	80,0	6.00X4.90	3	4,5	DIN2184-1	2B	B
MTP-1/4-20UNC-TB-V017	UNC1/4-20	–	20	7,0	30,0	14,1	80,0	7.00X5.50	3	5,2	DIN2184-1	2B	B
MTP-5/16-18UNC-TB-V017	UNC5/16-18	–	18	8,0	35,0	17,4	90,0	8.00X6.20	3	6,7	DIN2184-1	2B	B
MTP-3/8-16UNC-TB-V017	UNC3/8-16	–	16	10,0	39,0	18,9	100,0	10.00X8.00	3	8,1	DIN2184-1	2B	B
MTP-7/16-14UNC-TB-V017	UNC7/16-14	–	14	8,0	76,0	20,0	100,0	8.00X6.20	3	9,5	DIN2184-1	2B	B
MTP-1/2-13UNC-TB-V017	UNC1/2-13	–	13	9,0	83,0	23,0	110,0	9.00X7.00	3	10,9	DIN2184-1	2B	B
MTP-5/8-11UNC-TB-V017	UNC5/8-11	–	11	12,0	68,0	25,0	110,0	12.00X9.00	3	13,8	DIN2184-1	2B	B

Please check availability in current price and stock-list

MTP-V020

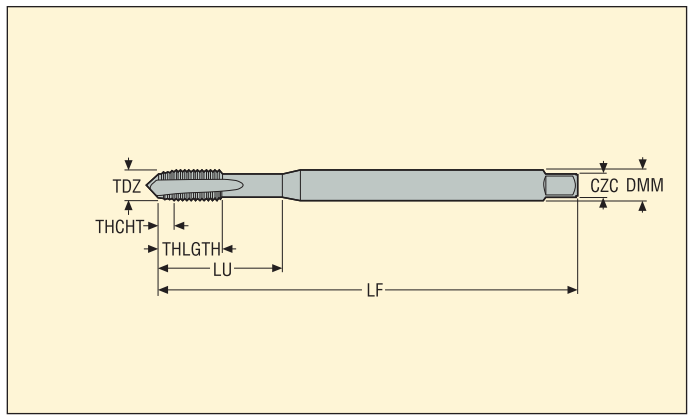

- For cutting data see page(s) 184
- Coating: TiN
- Substrate: HSS-PM

Designation	TDZ	Pitch		Dimensions in mm					NOF	PHDR	BSG	TCTR	THCHT
		mm	TPI	DMM	LU	THLGTH	LF	CZC					
MTP-8-36UNF-TB-V020	UNF8-36	–	36	4,5	21,0	11,4	63,0	4.50X3.40	3	3,5	DIN2184-1	2B	B
MTP-10-32UNF-TB-V020	UNF10-32	–	32	6,0	25,0	12,2	70,0	6.00X4.90	3	4,1	DIN2184-1	2B	B
MTP-1/4-28UNF-TB-V020	UNF1/4-28	–	28	7,0	30,0	14,1	80,0	7.00X5.50	3	5,5	DIN2184-1	2B	B
MTP-5/16-24UNF-TB-V020	UNF5/16-24	–	24	8,0	35,0	17,4	90,0	8.00X6.20	3	7,0	DIN2184-1	2B	B
MTP-7/16-20UNF-TB-V020	UNF7/16-20	–	20	8,0	76,0	20,0	100,0	8.00X6.20	3	10,0	DIN2184-1	2B	B
MTP-1/2-20UNF-TB-V020	UNF1/2-20	–	20	9,0	83,0	23,0	110,0	9.00X7.00	3	11,5	DIN2184-1	2B	B
MTP-5/8-18UNF-TB-V020	UNF5/8-18	–	18	12,0	68,0	25,0	110,0	12.00X9.00	3	14,6	DIN2184-1	2B	B

Please check availability in current price and stock-list

MTP-V023

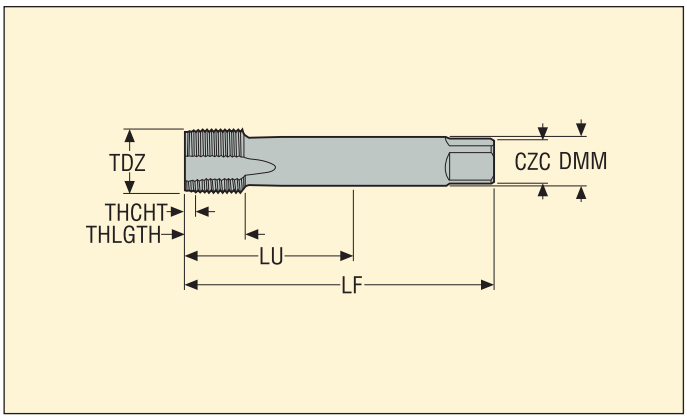

- For cutting data see page(s) 184
- Coating: TiN
- Substrate: HSS-PM

Designation	TDZ	Pitch		Dimensions in mm					NOF	PHDR	BSG	TCTR	THCHT
		mm	TPI	DMM	LU	THLGTH	LF	CZC					
MTP-1/8-28G-TB-V023	G1/8-28	–	28	7,0	67,0	17,6	90,0	7.00X5.50	3	8,8	DIN5156	NORMAL	B
MTP-1/4-19G-TB-V023	G1/4-19	–	19	11,0	71,0	21,0	100,0	11.00X9.00	3	11,8	DIN5156	NORMAL	B
MTP-3/8-19G-TB-V023	G3/8-19	–	19	12,0	58,0	21,0	100,0	12.00X9.00	4	15,3	DIN5156	NORMAL	B
MTP-1/2-14G-TB-V023	G1/2-14	–	14	16,0	80,0	24,0	125,0	16.00X12.00	4	19,1	DIN5156	NORMAL	B
MTP-5/8-14G-TB-V023	G5/8-14	–	14	18,0	78,0	24,0	125,0	18.00X14.50	4	21,1	DIN5156	NORMAL	B

Please check availability in current price and stock-list

MTH-V048

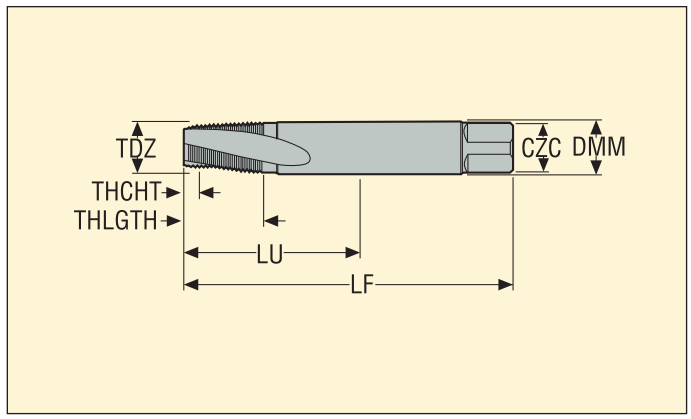

- For cutting data see page(s) 185
- Vaporised
- Substrate: HSS-E

Designation	TDZ	Pitch		Dimensions in mm					NOF	PHDR	BSG	TCTR	THCHT
		mm	TPI	DMM	LU	THLGTH	LF	CZC					
MTH-1/16-27NPT-XC-V048	NPT1/16-27	–	27	7,95	56,0	14,0	80,0	7.95X5.94	3	6,15	DIN/ANSI	NORMAL	C
MTH-1/8-27NPT-XC-V048	NPT1/8-27	–	27	11,1	64,0	14,0	90,0	11.10X8.33	4	8,4	DIN/ANSI	NORMAL	C
MTH-1/4-18NPT-XC-V048	NPT1/4-18	–	18	14,27	59,0	20,0	100,0	14.27X10.69	4	11,1	DIN/ANSI	NORMAL	C
MTH-3/8-18NPT-XC-V048	NPT3/8-18	–	18	17,78	67,0	20,0	110,0	17.78X13.49	5	14,3	DIN/ANSI	NORMAL	C
MTH-1/2-14NPT-XC-V048	NPT1/2-14	–	14	17,45	79,0	26,0	125,0	17.45X13.08	5	17,9	DIN/ANSI	NORMAL	C
MTH-3/4-14NPT-XC-V048	NPT3/4-14	–	14	23,01	78,0	26,0	140,0	23.01X17.25	5	23,2	DIN/ANSI	NORMAL	C
MTH-1-11.5NPT-XC-V048	NPT1-11.5	–	11,5	28,58	58,0	31,0	150,0	28.58X21.41	5	29,0	DIN/ANSI	NORMAL	C

Please check availability in current price and stock-list

MTH-V050

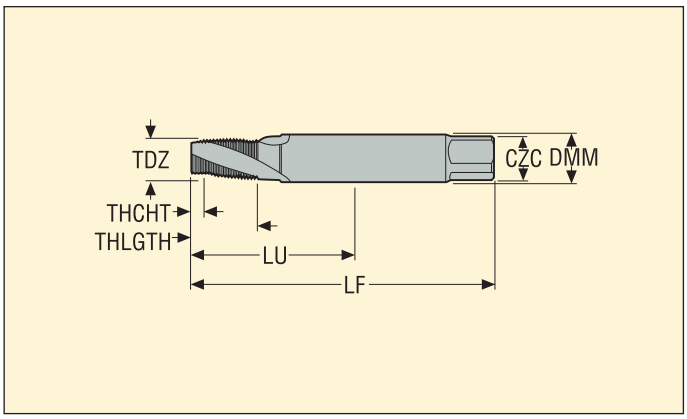

- For cutting data see page(s) 185
- Vaporised
- Substrate: HSS-E

Designation	TDZ	Pitch		Dimensions in mm					NOF	PHDR	BSG	TCTR	THCHT
		mm	TPI	DMM	LU	THLGTH	LF	CZC					
MTH-1/16-27NPTF-XC-V050	NPTF1/16-27	–	27	7,95	56,0	14,0	80,0	7.95X5.94	3	6,1	DIN/ANSI	NORMAL	C
MTH-1/8-27NPTF-XC-V050	NPTF1/8-27	–	27	11,1	64,0	14,0	90,0	11.10X8.33	4	8,4	DIN/ANSI	NORMAL	C
MTH-1/4-18NPTF-XC-V050	NPTF1/4-18	–	18	14,27	59,0	20,0	100,0	14.27X10.69	4	11,0	DIN/ANSI	NORMAL	C
MTH-3/8-18NPTF-XC-V050	NPTF3/8-18	–	18	17,78	67,0	20,0	110,0	17.78X13.49	5	14,3	DIN/ANSI	NORMAL	C
MTH-1/2-14NPTF-XC-V050	NPTF1/2-14	–	14	17,45	79,0	26,0	125,0	17.45X13.08	5	17,6	DIN/ANSI	NORMAL	C
MTH-3/4-14NPTF-XC-V050	NPTF3/4-14	–	14	23,01	78,0	26,0	140,0	23.01X17.25	5	23,0	DIN/ANSI	NORMAL	C

Please check availability in current price and stock-list

Steels, ferritic and martensitic stainless steels

SMG	Description	Properties	Reference	$k_{c1.1}$	m_c
P1	Free-cutting steels	$360 < R_m < 880$	11 SMn30 R_m = 385 N/mm²	1500	0,14
P2	Low-alloy ferritic steels, C < 0.25%wt Low-alloy weldable general structural steels	$320 < R_m < 600$	S235JRG2 R_m = 420 N/mm²	1600	0,23
P3	Ferritic & ferritic/pearlitic steels, C < 0.25%wt Weldable general structural steels Case-hardening steels	$430 < R_m < 610$	16 MnCr 5 R_m = 550 N/mm²	1800	0,14
P4	Low-alloy general structural steels, 0.25% < C < 0.67%wt Low-alloy Quench & Temper steels	$520 < R_m < 1200$	C 45E R_m = 660 N/mm²	2000	0,15
P5	Structural steels, 0.25% < C < 0.67%wt Quench & Temper steels	$550 < R_m < 1200$	42 CrMo 4 R_m = 700 N/mm²	2020	0,18
P6	Low-alloy through-hardening steels, C > 0.67%wt Low-alloy spring and bearing steels	$520 < R_m < 1200$	C 100S R_m = 600 N/mm²	2100	0,17
P7	Through-hardening steels, C > 0.67%wt Spring and bearing steels	$600 < R_m < 1200$	100 Cr 6 R_m = 650 N/mm²	2160	0,17
P8	Tool steels High Speed Steels (HSS)	$600 < R_m < 1200$	X 40 CrMoV 5 1 R_m = 700 N/mm²	2400	0,20
P11	Ferritic & martensitic stainless steels	$415 < R_m < 1200$	X 20 Cr 13 R_m = 675 N/mm²	2000	0,15
P12	Maraging and precipitation-hardening stainless steels	$500 < R_m < 1200$	X 5 CrNiCuNb 16 4 R_m = 1100 N/mm²	2100	0,17

Free-cutting, austenitic and duplex stainless steels

SMG	Description	Properties	Reference	$k_{c1.1}$	m_c
M1	Free-cutting austenitic stainless steels		X 10 CrNiS 18 9	1700	0,14
M2	Low-alloy austenitic stainless steels		X 5 CrNi 18 10	1920	0,18
M3	Medium-alloy austenitic stainless steels		X 2 CrNiMo 18 14 3	2070	0,17
M4	High-alloy austenitic and duplex stainless steels		X 2 CrNiMoN 22 5 3	2230	0,16
M5	Difficult high-alloy austenitic and duplex stainless steels		X 2 CrNiMoN 25 7 4	2510	0,13

Cast irons

SMG	Description	Properties	Reference	$k_{c1.1}$	m_c
K1	Grey cast irons (GCI)		EN-GJL-250	930	0,32
K2	Compacted graphite irons (CGI)		EN-GJV-400	1000	0,35
K3	Malleable cast irons (MCI)		EN-GJMB-550-4	1050	0,37
K4	Nodular cast irons (SGI)		EN-GJS-500-7	1160	0,37
K5	Austempered ductile irons (ADI)		EN-GJS-1000-5		
K6	Austenitic lamellar cast irons		EN-GJLA-XNiCuCr15-6-2		
K7	Austenitic nodular cast irons		EN-GJSA-XNiMn23-4		

Non-ferrous metals

SMG	Description	Properties	Reference	$k_{c1.1}$	m_c
N1	Aluminium alloys, Si < 9%		AW-7075		
N2	Aluminium alloys, 9% < Si < 16%		AC-44200 Si = 12%		
N3	Aluminium alloys, Si >16%		AlSi17Cu5		
N11	Copper alloys		CW614N	740	0,26

Superalloys and titanium

SMG	Description	Properties	Reference	$k_{c1.1}$	m_c
S1	Iron-based superalloys		Discalloy		
S2	Cobalt-based superalloys		Stellite 21		
S3	Nickel-based superalloys		Inconel 718	2530	0,21
S11	Titanium, low alloyed, (α)		Ti		
S12	Titanium, medium alloyed, (α+β)		TiAl6V4	1500	0,24
S13	Titanium, high alloyed, (near β and β)		Ti10V2Fe3Al		

Hard materials

SMG	Description	Properties	Reference	$k_{c1.1}$	m_c
H3	Case-hardened steels	58 < HRC < 62	16 MnCr 5 60 HRC	2070	0,14
H5	Quenched & Tempered steels	38 < HRC < 56	42 CrMo 4 50 HRC	2320	0,18
H7	Quenched & Tempered steels Bearing steels	56 < HRC < 64	100 Cr 6 60 HRC	2480	0,17
H8	Tool steels High Speed Steels (HSS)	38 < HRC < 64	X 40 CrMoV 5 1 50 HRC	2750	0,20
H11	Martensitic stainless steels	38 < HRC < 50	X 20 Cr 13 45 HRC	2300	0,15
H12	Maraged and precipitation-hardened stainless steels	1200 < R_m < 1650	X 5 CrNiCuNb 16 4 R_m = 1450 N/mm^2	2410	0,17
H21	Manganese steels	23 < HRC < 64	X 120 Mn 12 50 HRC		
H31	White cast irons	50 < HRC < 64	EN-GJN-HV600(XCr11) 55 HRC		

Other difficult materials

SMG	Description	Properties	Reference	$k_{c1.1}$	m_c
PM1	Low-alloy PM-materials		F-0008 Fe-0.7C		
PM2	Medium-alloy PM-materials		FLC-4608 Fe2Cu1.8Ni 0.5Mo0.2Mn0.8C		
PM3	High-alloy PM-materials Exhaust valve seat materials, etc.				
HF1	Hardfacing alloys Welded or plasma-deposited iron-based alloys				
HF2	Hardfacing alloys Welded or plasma-deposited cobalt- and nickel-based alloys				
CC1	Sintered tungsten carbide		G50		

Plastics and Composites

SMG	Description	Properties	Reference	$k_{c1.1}$	m_c
TS1	Thermosetting polymers		Urea formaldehyde (UF)		
TS2	Thermosetting carbon-fibre composites		T300 T700 T800 HTA-S IMA - Epoxy (M21)...		
TS3	Thermosetting glass-fibre composites		Epoxy - HX..(42..)/E glass (7781...)...		
TS4	Thermosetting aramide-fibre composites		Kevlar 49		
TP1	Thermoplastic polymers		Polycarbonate (PC)		
TP2	Thermoplastic carbon-fibre composites		PPS/PEEK - T300..		
TP3	Thermoplastic glass-fibre composites		PPS/PEEK - E glass or A glass...		
TP4	Thermoplastic aramide-fibre composites				

Graphite

SMG	Description	Properties	Reference	$k_{c1.1}$	m_c
GR1	Graphite		R 8500		

SMG

SMG	EN	EN-Nr	W.-Nr	DIN	AFNOR	BS	UNI	JIS	SS	UNS
	11 SMn 30	1.0715	1.0715	9 SMn 28	S 250	230 M 07	CF 9 SMn 28	SUM 22	1912	G12130
	11 SMnPb 30	1.0718	1.0718	9 SMnPb 28	S 250 Pb		CF 9 SMnPb 28	SUM 22 L	1914	G12134
	10 S 20	1.0721	1.0721	10 S 20	10 F 1	210 M 15	CF 10 S 20			
			1.0722	10 SPb 20	10 PbF 2		CF 10 SPb 20			
P1	15 SMn 13	1.0725	1.0723	15 S 20		210 A 15		SUM 32	1922	
	35 S20	1.0726	1.0726	35 S 20	35 MF 4	212 M 36			1957	G11400
	46 S20	1.0727	1.0727	46 S 20	45 MF 4	212 M 44			1973	G11460
	11 SMn 37	1.0736	1.0736	9 SMn 36	S 300	240 M 07	CF 9 SMn 36			G12150
	11 SMn 37	1.0736	1.0736	9 SMn 36	S 300	240 M 07	CF 9 SMn 36			G12150
	S235JR	1.0037	1.0037	St 37-2	E 24-2		Fe 360 B	STKM 12 C	1311	
	S235JRG2	1.0038	1.0116	St 37-3	E 24-3, E 24-4	4360-40 C	Fe 360 D FF		1312, 1313	
	S275J2G3	1.0144	1.0144	St 44-3 N	E 28-3, E 28-4	4360-43 C	Fe 430 D FF	SM 41 C	1412, 1414	
	C 10	1.0301	1.0301	C 10	34 C 10, XC 10	045 M 10	C 10	S 10 C		G10100
P2			1.0401	C 15	37 C 12, XC 18	080 M 15	C 15, C 16		1350	G10170
	C22	1.0402	1.0402	C 22	C 20	050 A 20	C 20, C 21		1450	G10200
	S355JR	1.0570	1.0570	St 52-3	E 36-3, E 36-4	4360-50 C	Fe 510 B	SM 50 YA	2172, 2132	
	C 15R	1.1141	1.1141	Ck 15	XC 15, XC 18	080 M 15	C 15, C 16	S 15 C, S 15 CK	1370	G10170
			1.1158	Ck 25	XC 25	060 A 25	C 25	S 25 C		G10250
			1.2162	21 MnCr 5	20 NC 5			SCR 420 H		
	16 Mo 3	1.5415	1.5415	15 Mo 3	15 D 3	1501-240	16 Mo 3		2912	
			1.5423	16 Mo 5		1503-245-420	16 Mo 5	SB 450 M		G45200
	14 NiCr 14	1.5752	1.5752	14 NiCr 14	12 NC 15	655 M 13		SNC 815 (H)		G33106
			1.5919	15 CrNi 6	16 NC 6	S 107	16 CrNi 4			
	18 NiCrMo 7 6	1.6587	1.6587	18 CrNiMo 7 6	18 NCD 6	820 A 16	18 NiCrMo 7			
P3	16 MnCr 5	1.7131	1.7131	16 MnCr 5	16 MC 5	527 M 17	16 MnCr 5	SCR 415	2511	G51170
	16 MnCrS 5	1.7139	1.7139	16 MnCrS 5						
	20 MnCr 5	1.7147	1.7147	20 MnCr 5	20 MC 5		20 MnCr 5	SMnC 420 (H)		G51200
	20 MnCrS 5	1.7149	1.7149	20 MnCrS 5	20 MnCrS 5			SMnC 21 H		
	13 CrMo 4 5	1.7335	1.7335	13 CrMo 4 4	15 CD 3.5	1501-620 Gr. 27	14 CrMo 4 5		2216	
			1.7337	16 CrMo 4 4	15 CD 4.5	1501-620 Gr. 27	14 CrMo 4 5		2216	
	10 CrMo 9 10	1.7380	1.7380	10 CrMo 9 10	10 CD 9.10	1501-622 Gr. 31	12 CrMo 9 10		2218	J21890
	C35		1.0501	C 35	55 C 35	060 A 35	C 35		1550	G10350
	E 335	1.0503	1.0503	C 45	65 C 45	80 M 46	C 45	S 45 C	1650	G10430
	C40		1.0511	C 40	60 C 40	080 M 40	C 40	S 40 C		
	E 360	1.0070	1.0535	St 70-2	A 70-2		Fe 690		1655	
	C60	1.0601	1.0601	C 60	CC 55	080 A 62	C 60			G10600
P4			1.1157	40 Mn 4	35 M 5	150 M 36				G10390
	G 28 Mn6	1.1165	1.1165	30 Mn 5		120 M 36		SMn 1 H, SCMn 2		G13300
	C 35E	1.1181	1.1181	Ck 35	XC 38 H1	080 M 36	C 35	S 35 C	1572	G10340
	C 45E	1.1191	1.1191	Ck 45	XC 42	080 M 46	C 45	S 45 C	1672	G10420
	C 60E	1.1221	1.1221	Ck 60	XC 60	080 A 62	C 60	S 58 C	1665, 1678	G10640
			1.1740	C 60 W	Y3 55			SK 7		
	55 SiCr7	1.7100	1.0904	55 Si 7	55 S 7	250 A 53	55 Si 8		2085, 2090	
			1.2330	35 CrMo 4	34 CD 4	708 A 37	35 CrMo 4		2234	T51620
			1.2542	45 WCrV 7		BS 1	45 WCrV 8 KU		2710	T41901
		1.2714	1.2714	56 NiCrMoV 7		BH 224-5	56 NiCrMoV7-KU	SKT 4		T61206
			1.5121	46 MnSi 4						
			1.5710	36 NiCr 6	35 NC 6	640 A 35		SNC 236		
			1.5736	36 NiCr 10	35 NC 11		35 NiCr 9	SNC 631 (H)		
	36 CrNiMo 4		1.6511	36 CrNiMo 4	40 NCD 3	816 M 40	38 NiCrMo 4 (KB)			G98400
P5	34 CrNiMo 6	1.6582	1.6582	34 CrNiMo 6	35 NCD 6	817 M 40	35 NiCrMo 6 (KW)	SNCM 447	2541	G43400
	34 Cr 4	1.7033	1.7033	34 Cr 4	32 C 4	530 A 32	34 Cr 4 (KB)	SCR 430 (H)		G51320
	41 Cr 4	1.7035	1.7035	41 Cr 4	42 C 4	530 M 40	41 Cr 4	SCR 440 (H)		G51400
	25 CrMo 4	1.7218	1.7218	25 CrMo 4	25 CD 4 S	708 M 25	25 CrMo 4 (KB)	SCM 425	2225	G41300
	42 CrMo 4	1.7225	1.7225	42 CrMo 4	42 CD 4	708 M 40	42 CrMo 4	SCM 440 (H)	2244	G41400
	42 CrMo 4	1.7225	1.7225	42 CrMo 4	42 CD 4	708 M 40	42 CrMo 4	SCM 440 (H)	2244	G41400
			1.7361	32 CrMo 12	30 CD 12	722 M 24	32 CrMo 12		2240	
	50 CrV 4	1.8159	1.8159	50 CrV 4	50 CV 4	735 A 50	51 CrV 4	SUP 10	2230	H61500
	41 CrAlMo 7 10	1.8509	1.8509	41 CrAlMo 7	40 CAD 6.12	905 M 39	41 CrAlMo 7	SACM 645	2940	K24065
	C 67S	1.1231	1.1231	Ck 67	XC 68	060 A 67	C 70		1770	G10700
	C 100S	1.1274	1.1274	Ck 101		060 A 96		SUP 4	1870	G10950
P6	C 105U	1.1545	1.1545	C 105 W1	Y1 105		C 100 KU		1880	
			1.1645	C 105 W2	Y1 105		C 100 KU	SK 3		
			1.1663	C 125 W	Y2 120		C 120 KU	SK 2		

SMG

U.N.E./ I.H.A.	AISI / ASTM	GOST	ČSN	Misc. Brands	Condition	Structure
	1213				Annealed	
	12 L 13				Annealed	
	1108				Annealed	
	11 L 08				Annealed	
					Annealed	
	1140	40			Annealed	
	1146				Annealed	
	1215				Annealed	
	12 L 14				Annealed	
		16D			Annealed	
	A573 Grade 58	18kp	11 378		Annealed	
	A573 Grade 70	St14kP	11 448		Annealed	
	1010	10			Annealed	
F.1110	1015	15			Annealed	
	1020, 1023	20	12 024		Annealed	
		17G1S	11 523		Annealed	
F.1511	1015	15			Annealed	
F.1120	1025	25			Annealed	
					Annealed	
	A204 Grade A		15 020		Annealed	
	4520				Annealed	
	3310, 9314	20X2H4A	16 420		Annealed	
	4320		16 220		Annealed	
					Annealed	
F.1516	5115	12KHN2	14 220		Annealed	
		18HG			Annealed	
	5120	20KH	14 221		Annealed	
	5120 H	20KH			Annealed	
	A182-F11, A182-F12	12KHM	15 121		Annealed	
	A387 Grade 12 Cl. 2				Annealed	
F.155	A182-F22	12KH8	15 313		Annealed	
F.1130	1035	35	12 040		Annealed	
F.5110	1045	45	12 050		Annealed	
	1040	40	12 041		Annealed	
F.1150	1055	55			Annealed	
	1060	60	12 061		Annealed	
	1039	40G			Annealed	
	1330	30G2			Annealed	
F.1135	1035	35			Annealed	
F.1140	1045	45	12 050		Annealed	
F.1150	1064	60			Annealed	
	1060	60			Annealed	
F.144	9255	55S2			Annealed	
F.1250	4135	35KHM			Annealed	
F.5241	S1	5KHV2S			Annealed	
	L6	5KHNV			Annealed	
	5045				Annealed	
	3135				Quenched & Tempered	
	3435				Annealed	
	9840				Quenched & Tempered	
F.1280	4340	38H2N2MA	16 343		Annealed	
	5132	35KH			Quenched & Tempered	
	5140	40H	14 140		Quenched & Tempered	
F.1251	4130	20KHM	15 130		Quenched & Tempered	
F.1252	4142, 4140	38HM	15 142		Annealed	
F.1252	4142, 4140	38HM	15 142		Quenched & Tempered	
					Quenched & Tempered	
F.143	6150	50KHFA	15 260		Quenched & Tempered	
F.1740	A355 Cl. A				Annealed	
F.5103	1070	70			Annealed	
F.5117	1095				Annealed	
F.5118	W1	U10A			Annealed	
		U10			Annealed	
	W1	U13			Annealed	

SMG

SMG	EN	EN-Nr	W.-Nr	DIN	AFNOR	BS	UNI	JIS	SS	UNS
P7	107 CrV 3	1.2210	1.2210	115 CrV 3	100 C 3		107 CrV 3 KU			T61202
			1.2510	100 MnCrW 4	90 MWCV 5	BO 1	95 MnWCr 5 KU	SKS 3	2140	T31501
	90 MnCrV 8	1.2842	1.2842	90 MnCrV 8	90 MV 8	BO 2	90 MnVCr 8 KU			T31502
	100 Cr 6	1.3505	1.3505	100 Cr 6	100 C 6	534 A 99	100 Cr 6	SUJ 2	2258	G51986
P8	X 210 Cr 12	1.2080	1.2080	X 210 Cr 12	Z 200 C 12	BD 3	X 210 Cr 13 KU	SKD 1		T30403
			1.2343	X 38 CrMoV 5 1	Z 38 CDV 5	BH 11	X 37 CrMoV 5 1 KU	SKD 6		T20811
	X 40 CrMoV 5 1	1.2344	1.2344	X 40 CrMoV 5 1	Z 40 CDV 5	BH 13	X 40 CrMo 5 1 1 KU	SKD 61	2242	T20813
	X 100 CrMoV 5	1.2363	1.2363	X 100 CrMoV 5 1	Z 100 CDV 5	BA 2	X 100 CrMoV 5 1 KU	SKD 12	2260	T30102
			1.2365	X 32 CrMoV 3 3	32 DCV 28	BH 10	30 CrMoV 12 27 KU	SKD 7		T20810
			1.2436	X 210 CrW 12			X 215 CrW 12 1 KU	SKD 2	2312	
			1.2601	X 165 CrMoV 12			X 165 CrMoW 12 KU		2310	
			1.2713	55 NiCrMoV 6	55 NCDV 7			SKT 4		T61206
	HS 6-5-2-5	1.3243	1.3243	S 6-5-2-5	Z 85 WDKCV 06-05-05-04-02		HS 6-5-2-5	SKH 55	2723	
	HS 2-10-1-8	1.3247	1.3247	S 2-10-1-8	Z 110 DKCWV 09-08-04	BM 42	HS 2-9-1-8	SKH 51		T11342
	HS 18-1-2-5	1.3255	1.3255	S 18-1-2-5	Z 80 WKCV 18-05-04-01	BT 4	HS 18-1-1-5	SKH 3		T12004
	HS 6-5-2	1.3343	1.3343	S 6-5-2	Z 85 WDCV 06-05-04-02	BM 2	HS 6-5-2	SKH 9, SKH 51	2722	T11302
	HS 2-9-2	1.3348	1.3348	S 2-9-2	Z 100 DCWV 09-04-02-02		HS 2-9-2	SKH 58	2782	T11307
	HS 18-0-1	1.3355	1.3355	S 18-0-1	Z 80 WCV 18-04-01	BT 1	HS 18-0-1	SKH 2		T12001
P11	X 6 Cr 13	1.4000	1.4000	X 6 Cr 13	Z 6 C 12	403 S 17	X 6 Cr 13	SUS 403	2301	S41008
	X 12 Cr 13	1.4006	1.4006	X 10 Cr 13	Z 10 C 13	410 S 21	X 12 Cr 13	SUS 410	2302	S41000
	X 6 Cr 17	1.4016	1.4016	X 6 Cr 17	Z 8 C 17	430 S 15	X 8 Cr 17	SUS 430	2320	S43000
	X 20 Cr 13	1.4021	1.4021	X 20 Cr 13	Z 20 C 13	420 S 37	X 20 Cr 13	SUS 420 J 1	2303	S42000
	X 39 Cr 13	1.4031	1.4031	X 40 Cr 13	Z 40 C 14	420 S 45	X 40 Cr 14	SUS 420	2304	S40280
	X 70 CrMo 15	1.4109	1.4109	X 65 CrMo 14	Z 70 D 14			SUS 440 A		S44002
	X 90 CrMoV 18	1.4112	1.4112	X 90 CrMoV 18	Z 2 CND 18 05	409 S 19	X CrTi 12	SUS 440 B	2327	S44003
	X 105 CrMo 17	1.4125	1.4125	X 105 CrMo 17	Z 100 CD 17		X 105 CrMo 17	SUS 440 C		S44004
	X 3 CrNIMo 13 3	1.4313	1.4313	X 5 CrNi 13 4	Z 5 CN 13.4	425 C 11	X 6 CrNi 13 04	SCS 5	2385	S41500
	X 18 CrN 28	1.4749	1.4749	X 18 CrN 28	Z 18 C 25				2322	S44600
P12	X 6 NiCrTiMoV 25 15	1.4534	1.4534	X 3 CrNiMoAl 13 8 2						S13800
	X 4 CrNiCuNb 16 4	1.4540	1.4540	X 4 CrNiCuNb 16 4						S15500
		1.4540	1.4540	X 4 CrNiCuNb 16 4	Z 4 CNUNb 16.4 M					S15500
	X 4 CrNiCuNb 16 4	1.4540	1.4540	X 4 CrNiCuNb 16 4						S15500
	X 5 CrNiCuNb 16 4	1.4542	1.4542	X 5 CrNiCuNb 16 4				SUS 630		S17400
	X 5 CrNiCuNb 17 4	1.4548	1.4542	X 5 CrNiCuNb 17 4	Z 6 CNU 17.4			SCS 24, SUS 630		S17400
	X 7 CrNiAl 17 7	1.4564	1.4564	X 7 CrNiAl 17 7	Z 9 CAN 17.7	301 S 81	X 7 CrNiAl 17 7	SUS 631	2388	S17700
	X 2 NiCoMoTi 18 12 4	1.6356	1.6356	X 2 NiCoMoTi 18 12 4						K93160
	X 2 NiCoMoTi 18 9 5	1.6358	1.6358	X 2 NiCoMoTi 18 9 5	Z 2 NKD 19-09					K93120
	X 2 NiCoMo 18 9 5	1.6358	1.6358	X 2 NiCoMoTi 18 9 5	Z 2 NKD 19-09					K93120
	X 2 NiCoMo 18 8 5	1.6359	1.6359	X 2 NiCoMo 18 8 5		S 162				K92890
	X 2 NiCoMo 18 8 5	1.6359	1.6359	X 2 NiCoMo 18 8 5		S 162				K92890
M1	X 10 CrNiS 18 9	1.4305	1.4305	X 10 CrNiS 18 9	Z 10 CNF 18.09	303 S 31	X 10 CrNi 18 09	SUS 303	2346	S30300
M2	X 2 CrNi 19 11	1.4306	1.4306	X 2 CrNi 19 11	Z 2 CN 18.10	304 S 12	X 3 Cr Ni 18 11	SUS 304 L	2352	S30403
	X 5 CrNi 18 10	1.4301	1.4301	X 5 CrNi 18 10	Z 6 CN 18.09	304 S 31	X 5 CrNi 18 11	SUS 304	2333	S30400
	X 5 CrNiMo 17 12 2	1.4401	1.4401	X 5 CrNiMo 17 12 2	Z 3 CND 17.11.1	316 S 31	X 5 CrNiMo 17 12	SUS 316	2347	S31600
	X 6 CrNiNb 18 10	1.4550	1.4550	X 6 CrNiNb 18 10	Z 6 CNNb 18.10	347 S 31	X 6 CrNiNb 18 11	SUS 347	2338	S34700
	X 9 CrNi 18 8	1.4310	1.4310	X 12 CrNi 17 7	Z 12 CN 17.07	301 S 21	X 12 CrNi 17 07	SUS 301	(2331)	S30100
	X 12 CrNi 18 8	1.4300	1.4300	X 12 CrNi 18 8	Z 12 CN 18	302 S 25		SUS 302	2331	S30200
M3	X 2 CrNiMo 18 14 3	1.4435	1.4435	X 2 CrNiMo 18 14 3	Z 2 CND 17.13	316 S 12	X 2 CrNiMo 17 13 2	SCS 16, SUS 316 L	2353	S31603
	X 2 CrNiMoN 17 13 3	1.4429	1.4429	X 2 CrNiMoN 17 13 3	Z 2 CND 17.13 Az	316 S 62	X 2 CrNiMoN 17 13 3	SUS 316 LN	2375	S31653
	X 2 CrNiN 18 10	1.4311	1.4311	X 2 CrNiN 19 11	Z 2 CN 18 .10 Az	304 S 62	X 2 CrNiN 18 11	SUS 304 LN	2371	S30453
	X 3 CrNiMo 18 12 3	1.4466	1.4466	X 5 CrNi 18 15		317 S 16	X 5 CrNi 18 15	SUS 317	2366	S31700
	X 9 CrNiSiNCe 21 11 2	1.4835	1.4893	X 9 CrNiSiNCe 21 11 2		310 S 31			2368	S30815
	X 12 CrNi 25 21	1.4335	1.4335	X 12 CrNi 25 21	Z 12 CN 25.20	310 S 24	X 6 CrNi 26 20	SUH 310, SUS 310 S	2361	S31008
M4	X 2 CrNiMoN 22 5 3	1.4462	1.4462	X 2 CrNiMoN 22 5	Z 2 CND 22.05 Az	332 S 15	X 2 CrNiMoN 22 5		2377	S31803
	X 2 CrNiMoSi 19 5	1.4424	1.4417	X 2 CrNiMoSi 19 5	Z 2 CND 18.05.03				2376	S31500
	X 2 NiCrMoCu 25 20 5	1.4539	1.4539	X 2 NiCrMoCu 25 20 5	Z 2 NCDU 25 20	904 S 13			2562	N08904
	X 3 CrNiMo 27 5 2	1.4460	1.4460	X 4 CrNiMo 27 5 2	Z 3 CND 25.7 Az		X 3 CrNiMo 27 5 2	SUS 329 J 1	2324	S32900
	X 5 CrNiCuNb 16 4	1.4980	1.4943	X 4 NiCrTi 25 15	Z 6 NCTDV 25.15	HR 51		SUH 660	2570	S66286
M5	X 1 CrNiMoN 20 18 7	1.4547	1.4529	X 1 CrNiMoN 20 18 7	Z 1 CNDU 20.18.05 Az		X 1 CrNiMoN 20 18 7		2778	S31254
	X 1 CrNiMoN 25 22 8	1.4652	1.4652	X 2 CrNiMoN 25 22 7						S32654
	X 10 NiCrAlTi 32 20	1.4876	1.4876	X 10 NiCrAlTi 32 20	Z 10 NC 32.21			NCF 800		N08800
	X 2 CrNiMoN 25 7 4	1.4410	1.4410	X 2 CrNiMoN 25 7 4	Z 3 CND 25.07 Az		X 2 CrNiMoN 25 7 4		2328	S32750

SMG

U.N.E./ I.H.A.	AISI / ASTM	GOST	ČSN	Misc. Brands	Condition	Structure
F.520L	L2	11KHF			Annealed	
F.5220	O1	9KHVG			Annealed	
	O2	9G2F			Annealed	
F.5230	52100	SHKH15	14 109		Annealed	
F.5212	D3	KH12			Annealed	
	H11	4KH5MFS			Annealed	
F.5318	H13	4KH5MF1S			Annealed	
F.5227	A2	9KH5VF			Annealed	
	H10	3KH3M3F			Annealed	
F.5213		KH12			Annealed	
		KH12MF			Annealed	
F.520.S	L6	5KHNM			Annealed	
F.5613	M35	R6M5K5			Annealed	
	M42	R2AM9K5			Annealed	
	T4	R18K5F2			Annealed	
F.5603	M2	R6M5			Annealed	
	M7				Annealed	
	T1	R18			Annealed	
	403	08KH13			Annealed	Ferritic
F.3401	410, CA-15	12KH13, 08KH13			Annealed	Martensitic
F.3113	430	12KH17			Annealed	Ferritic
F.5261	420	20KH13	17 022		Annealed	Martensitic
F.3404	420	40KH13			Annealed	Martensitic
	440 A				Annealed	Martensitic
	440 B	95KH18			Annealed	Martensitic
	440 C	95KH18			Annealed	Martensitic
	A182 F6NM			F6NM	Annealed	Martensitic
	446	15KH28			Annealed	Ferritic
	XM-13			PH 13-8 Mo	Solution annealed	Austenitic
	XM-12			15-5 PH	H1150	Martensitic
	XM-12			15-5 PH	Solution annealed	Martensitic
	XM-12			15-5 PH	H1025	Martensitic
	SAE 630			17-4 PH	H1150	Martensitic
	630			17-4 PH	Solution annealed	Martensitic
	631	09KH17N7YU1		17-7 PH	Solution annealed	Austenitic/Ferritic
	AMS 6515			Marage 350	Solution annealed	Martensitic
	AMS 6521			Marage 300	Solution annealed	Martensitic
	AMS 6514			Marage 300, Vascomax C300	Solution annealed	Martensitic
	AMS 6512			Marage 250	Solution annealed	Martensitic
	AMS 6512			Marage 250, Vascomax C250	Solution annealed	Martensitic
F.3508	303	12KH19N9			Annealed	Austenitic
F.3504	304 L	03KH18N11			Annealed	Austenitic
F.3504	304	08KH18N10	17 240		Annealed	Austenitic
F.3534	316	08KH17H13M2T	17 346		Annealed	Austenitic
F.3524	347	08KH18N12B			Annealed	Austenitic
F.3517	301	07KH16N6			Annealed	Austenitic
	302	12KH18N9			Annealed	Austenitic
F.3533	(316 L)	03KH17N14M3	17 349		Annealed	Austenitic
	316 LN	03KH16N15M3			Annealed	Austenitic
F.3541	304 LN	03KH18N11			Annealed	Austenitic
	317	08KH17H15M3T			Annealed	Austenitic
				253 MA	Annealed	Austenitic
	310 S	12KH25N20			Annealed	Austenitic
	329 LN			SAF 2205	Annealed	Duplex
				3RE60	Annealed	Duplex
	904L				Annealed	Super austenitic
	329				Annealed	Duplex
	660			A286	Solution annealed	Austenitic
				254 SMO	Annealed	Super austenitic
				654 SMO	Annealed	Super austenitic
				Alloy 800	Annealed	Austenitic
	F 53			SAF 2507	Annealed	Super duplex

SMG

SMG	EN	EN-Nr	W.-Nr	DIN	AFNOR	BS	UNI	JIS	SS	UNS
K1	EN-GJL-150	0.6150	0.6150	GG-15	Ft 15 D	Grade 150	G15	FC 150	01 15-00	F11601
	EN-GJL-200	0.6200	0.6200	GG-20	Ft 20 D	Grade 220	G20	FC 200	01 20-00	F12101
	EN-GJL-250	0.6250	0.6250	GG-25	Ft 25 D	Grade 260	G25	FC 250	01 25-00	F12401
	EN-GJL-350	0.6350	0.6350	GG-35	Ft 35 D	Grade 350	G35	FC 350	01 35-00	F13502
	EN-GJL-215			GG-220 HB					02 19	
K2	EN-GJV-300			GJV-300						
	EN-GJV-350			GJV-350						
	EN-GJV-400			GJV-400						
	EN-GJV-450			GJV-450						
	EN-GJV-500			GJV-500						
K3	EN-GJMB-550-4	0.8155		GTS-55-04	P 540/5	P 540/5	P 55-04	PCMP55-04	08 54-00	F24130
K4	EN-GJS-350-22	0.7033	0.7033	GGG-35.3	FGS 370-17	Grade 350/22		FCD 350-22L	07 17-15	
	EN-GJS-400-15	0.7040	0.7040	GGG-40	FGS 400-12	Grade 420/12	GS 400-12	FCD 400-18L	07 17-02	F32800
	EN-GJS-400-18	0.7043	0.7043	GGG-40.3	FGS 370-17	Grade 370/17	GSO 42/17		07 17-12	F32800
	EN-GJS-500-7	0.7050	0.7050	GGG-50	FGS 500-7	Grade 500/7	GS 500-7	FCD 500-7	07 27-02	F33800
	EN-GJS-600-3	0.7060	0.7060	GGG-60	FGS 600-3	Grade 600/3	GS 600-3	FCD 600-3	07 32-03	F34100
	EN-GJS-700-2	0.7070	0.7070	GGG-70	FGS 700-2	Grade 700/2	GS 700-2	FCD 700-2	07 37-01	F34800
K5										ADI grade 5
	EN-GJS-1000-5			GJS-1000-5						ADI grade 2
	EN-GJS-1200-2			GJS-1200-2						ADI grade 3
	EN-GJS-1400-1			GJS-1400-1						ADI grade 4
	EN-GJS-800-8			GJS-800-8						ADI grade 1
K6	EN-GJLA-XNiCr 20-2	0.6660	0.6660	GGL-NiCr 20 2	FGL Ni20 Cr2	Grade F2			05 23-00	F41002
	EN-GJLA-XNiCr 30-3	0.6676	0.6676	GGL-NiCr 30 3	FGL Ni30 Cr3	Grade F3				F41004
	EN-GJLA-XNiCuCr 15-6-2	0.6655	0.6655	GGL-NiCuCr 15 6 2	FGL Ni15 Cu6 Cr2	Grade F1				F41000
K7	EN-GJSA-XNiMn 13-7	0.7652	0.7652	GGG-NiMn 13 7	FGS Ni13 Mn7	Grade S6			07 72-00	
	EN-GJSA-XNiCr 20-2	0.7660	0.7660	GGG-NiCr 20 2	FGS Ni20 Cr2	Grade S2				F43000
	EN-GJSA-XNiMn 23-4	0.7673	0.7673	GGG-NiMn 23 4	FGS Ni23 Mn4	Grade S2M				F43010
	EN-GJSA-XNiCr 30-3	0.7676	0.7676	GGG-NiCr 30 3	FGS Ni30 Cr3	Grade S3				F43003
	EN-GJSA-XNi 35	0.7683	0.7683	GGG-Ni 35	FGS Ni35					F43006
N1	AW-1050A	Al99.5	3.0255	Al99.5	A-5/1050A	1B		(A1050)	4007	AA1050A
	AW-2011	AlCuBiPb	3.1655	AlCuBiPb	A-U5PbBi/2011	FC1		A2011	4355	AA2011
	AW-2014	AlCuSiMn	3.1255	AlCuSiMn	A-U4SG/2014	H15			4338	AA2014
	AW-5005	AlMg1	3.3315	AlMg1	A-G0.6	N41			4106	AA5005
	AW-6060	AlMgSi0.5	3.3206	AlMgSi0.5	A-GS/6060	(H9)			4103	AA6060
	AW-6063	AlMgSi0.7	3.3210	AlMgSi0.7	A-GSUC/6061	(H10)		(A6063)	4104, 4107	AA6005
	AW-3103	AlMn1	3.0515	AlMn1		N3			4054	AA3103
	AW-3003	AlMn1Cu	3.0517	AlMn1Cu	A-M1/3003			A3003		AA3003
	AW-7020	AlZn4.5Mg1	3.4335	AlZn4.5Mg1	A-Z5G/7020	H17			4425	AA7020
	AW-7075		3.4365	AlZnMgCu1.5	A-Z5GU/7075	2L95/2L96		A7075		AA7075
	AC-42000		3.2341	G-AlSi5Mg	A-S7G	LM25	3599	AC 4C	4244	
	AC-46200	AlSi8Cu3(Si)	3.2161	G-AlSi8Cu3					4251	A13800
	MG-P-63	MgAl6Zn	3.5612	G-MgAl6Zn	G-A6-Z1	MAG-E-121				M11600
	MG-P-61	MgAl8Zn	3.5812	G-MgAl8Zn	(G-A7-Z1)					
	MN65120	MgSe3Zn2Zr1	3.5103	G-MgSe3Zn2Zr1	ZRE1	MAG6-TE				M12330
N2	AC-43400	AlSi10Mg(Fe)	3.2381	G-AlSi10Mg	A-S10G	LM9			4253	A13600
	AC-44200	AlSi12	3.2382	GD-AlSi12						
	AW-6082	AlMgSi1	3.2315	AlMgSi1	A-SGM0.7/6082	H30			4212	AA6082
N3		AlSi17Cu5						ADC14		
N11	CC331G		2.0940.01	CuAl10Fe	CuAl10Fe	AB1			5710	C95200
	CC333G		2.0975.01	CuAl10Ni	CuAl10Ni5Fe5	AB2			5716	C95500
		CuNi10Fe1Mn	2.0872	CuNi10Fe1Mn	CuNi10Fe1Mn	CN102			5667	C70600
				CuNi10Zn45						
		CW408J	2.0790	CuNi18Zn19Pb	CuNi18Zn19Pb1					C76300
	CW352H		2.1176	CuPb10Sn	CuSn10Pb10	LB2			5640	C93700
	CC480K		2.1050.01	CuSn10	CuSn10	CT1			5443	C90700
			2.1087	CuSn10Zn					5458	C90500
	CW452K	CuSn6	2.1020	CuSn6	CuSn6	PB103		C5191	5428	C51900
	CW502L	CuZn15	2.0240	CuZn15	CuZn15	CZ102		C2300	5112	C23000
	CW706R	CuZn28Sn1	2.0470	CuZn28Sn1	CuZn29Sn1				5220	C44300
	CW508L	CuZn37	2.0321	CuZn37	CuZn37	CZ108			5150	C27200
	CW717R	CuZn38Sn1	2.0530	CuZn38Sn1						C46400
	CW614N	CuZn39Pb3	2.0401	CuZn39Pb3	CuZn39Pb3	CZ121			5170	C38500
	CW612N	CuZn40Pb2	2.0402	CuZn40Pb2	CuZn39Pb2	CZ120			5168	C37800
	CW622N	CuZn44Pb2	2.0410	CuZn44Pb2		CZ104			5272	C68700

SMG

U.N.E./ I.H.A.	AISI / ASTM	GOST	ČSN	Misc. Brands	Condition	Structure
	A48 25 B	Sc 15	422 415			Grey cast iron (GCI)
	A48 30 B	Sc 20	422 420			Grey cast iron (GCI)
	A48 35 B	Sc 25	422 425			Grey cast iron (GCI)
	A48 50 B	Sc 35				Grey cast iron (GCI)
	G 3500					Grey cast iron (GCI)
	Grade 350					Compacted graphite iron (CGI)
	Grade 400					Compacted graphite iron (CGI)
	Grade 400-15					Compacted graphite iron (CGI)
	Grade 450					Compacted graphite iron (CGI)
	Grade 500					Compacted graphite iron (CGI)
	A220 60004				Tempered	Malleable cast iron (MCI)
						Nodular cast iron (SGI)
FGE 38-17	60-40-18	Vc 42-12	422 304			Nodular cast iron (SGI)
	60-40-18	Vc 42-12				Nodular cast iron (SGI)
FGE 50-7	A536, 80-55-06	Vc 50-2	422 305			Nodular cast iron (SGI)
FGE 60-2	A476, 80-60-03	Vc 60-2	422 306			Nodular cast iron (SGI)
FGE 70-2	A536, 100-70-03	Vc 70-2				Nodular cast iron (SGI)
	1600/1300/-					Austempered ductile iron (ADI)
	1050/700/7					Austempered ductile iron (ADI)
	1200/850/4					Austempered ductile iron (ADI)
	1400/1100/1					Austempered ductile iron (ADI)
	850/550/10					Austempered ductile iron (ADI)
	A436 Type 2			Ni-Resist 2		Austenitic lamellar cast iron
	A436 Type 3			Ni-Resist 3		Austenitic lamellar cast iron
	A436 Type 1			Ni-Resist 1		Austenitic lamellar cast iron
				Nodumag		Austenitic nodular cast iron
	A436 Type D-2			Ni-Resist D-2		Austenitic nodular cast iron
	A439 Type D-2M			Ni-Resist D-2M		Austenitic nodular cast iron
	A436 Type D-3			Ni-Resist D-3		Austenitic nodular cast iron
	A439 Type D-5			Ni-Resist D-5		Austenitic nodular cast iron
	B26					
	A380					
	AZ61A					
	AZ80A					
	AMS 4442					
	B85					
	A413.2					
	B390.0					
	CA952	BrA9ZH3L				
	CA955	BrA10ZH4N4L				
	CA937					
		BrOF6.5-0.15				
		L90				
		LOMsh70-1-0.05				
		LO60-1				
		LAMsh77-2-0.05				

SMG

SMG	EN	EN-Nr	W.-Nr	DIN	AFNOR	BS	UNI	JIS	SS	UNS
S1										
S2										
S3	NiMo30		2.4810							N10002
	NiMo16Cr15W		2.4819							N10276
	NiCr19Fe19Nb5Mo3		2.4668							N07718
			2.4669							N07750
	NiCr20TiAl		2.4631							N07080
	NiCr19Co18Mo4Ti3Al3									N07500
	NiCr20Co13Mo4Ti3Al		2.4654							N07001
S11			3.7024							
										R54620
S12										R56320
	TiAl6V4		3.7164							R56400
S13				TiV10Fe2Al3						
H3	16 MnCr 5	1.7131	1.7131	16 MnCr 5	16 MC 5	527 M 17	16 MnCr 5	SCR 415	2511	G51170
H5	C 67S	1.1231	1.1231	Ck 67	XC 68	060 A 67	C 70		1770	G10700
	C 75S	1.1248	1.1248	Ck 75	XC 75	060 A 78	C 75		1774, 1778	G10780
	C 100S	1.1274	1.1274	Ck 101		060 A 96		SUP 4	1870	G10950
	C 105U	1.1545	1.1545	C 105 W1	Y1 105		C 100 KU		1880	
			1.2550	60 WCrV 7	55 WC 20		55 WCrV 8 KU			
	55 Cr 3	1.7176	1.7176	55 Cr 3	55 C 3	527 A 60	55 Cr 3	SUP 9 (A)	2253	G51550
	42 CrMo 4	1.7225	1.7225	42 CrMo 4	42 CD 4	708 M 40	42 CrMo 4	SCM 440 (H)	2244	G41400
H7	107 CrV 3	1.2210	1.2210	115 CrV 3	100 C 3		107 CrV 3 KU			T61202
			1.2510	100 MnCrW 4	90 MWCV 5	BO 1	95 MnWCr 5 KU	SKS 3	2140	T31501
	90 MnCrV 8	1.2842	1.2842	90 MnCrV 8	90 MV 8	BO 2	90 MnVCr 8 KU			T31502
	100 Cr 6	1.3505	1.3505	100 Cr 6	100 C 6	534 A 99	100 Cr 6	SUJ 2	2258	G51986
H8	X 40 CrMoV 5 1	1.2344	1.2344	X 40 CrMoV 5 1	Z 40 CDV 5	BH 13	X 40 CrMo 5 1 1 KU	SKD 61	2242	T20813
	X 100 CrMoV 5	1.2363	1.2363	X 100 CrMoV 5 1	Z 100 CDV 5	BA 2	X 100 CrMoV 5 1 KU	SKD 12	2260	T30102
	X 155 CrVMo 12 1		1.2379	X 155 CrVMo 12 1	Z 160 CDV 12	BD 2	X 155 CrVMo 12 1 KU	SKD 11		T30402
			1.2436	X 210 CrW 12			X 215 CrW 12 1 KU	SKD 2	2312	
			1.2601	X 165 CrMoV 12			X 165 CrMoW 12 KU		2310	
			1.2713	55 NiCrMoV 6	55 NCDV 7			SKT 4		T61206
	HS 6-5-2-5	1.3243	1.3243	S 6-5-2-5	Z 85 WDKCV 06-05-05-04-02		HS 6-5-2-5	SKH 55	2723	
	HS 2-10-1-8	1.3247	1.3247	S 2-10-1-8	Z 110 DKCWV 09-08-	BM 42	HS 2-9-1-8	SKH 51		T11342
	HS 18-0-1	1.3355	1.3355	S 18-0-1	Z 80 WCV 18-04-01	BT 1	HS 18-0-1	SKH 2		T12001
H11	X 20 Cr 13	1.4021	1.4021	X 20 Cr 13	Z 20 C 13	420 S 37	X 20 Cr 13	SUS 420 J 1	2303	S42000
	X 70 CrMo 15	1.4109	1.4109	X 65 CrMo 14	Z 70 D 14			SUS 440 A		S44002
	X 90 CrMoV 18	1.4112	1.4112	X 90 CrMoV 18	Z 2 CND 18 05	409 S 19	X CrTi 12	SUS 440 B	2327	S44003
	X 105 CrMo 17	1.4125	1.4125	X 105 CrMo 17	Z 100 CD 17		X 105 CrMo 17	SUS 440 C		S44004
H12	X 4 CrNiCuNb 16 4	1.4540	1.4540	X 4 CrNiCuNb 16 4						S15500
	X 5 CrNiCuNb 16 4	1.4542	1.4542	X 5 CrNiCuNb 16 4				SUS 630		S17400
	X 5 CrNiCuNb 16 4	1.4542	1.4542	X 5 CrNiCuNb 16 4				SUS 630		S17400
	X 7 CrNiAl 17 7	1.4568	1.4568	X 7 CrNiAl 17 7	Z 9 CAN 17.7	301 S 81	X 7 CrNiAl 17 7	SUS 631	2388	S17700
	X 8 CrNiMoAl 15 7 5	1.4574	1.4574	X 8 CrNiMoAl 15 7 5						S15700
	X 6 NiCrTiMoV 25 15	1.4980	1.4943	X 4 NiCrTi 25 15	Z 6 NCTDV 25.15	HR 51		SUH 660	2570	S66286
	X 2 NiCoMo 18 8 5	1.6359	1.6359	X 2 NiCoMo 18 8 5		S 162				K92890
	X 2 NiCoMoTi 18 9 5	1.6358	1.6358	X 2 NiCoMoTi 18 9 5	Z 2 NKD 19-09					K93120
	X 2 NiCoMoTi 18 9 5	1.6358	1.6358	X 2 NiCoMoTi 18 9 5	Z 2 NKD 19-09					K93120
	X 2 NiCoMoTi 18 12 4	1.6356	1.6356	X 2 NiCoMoTi 18 12 4						K93160
H21	X 120 Mn 12	1.3401	1.3401	X 120 Mn 12	Z 120 M 12	BW 10		SC MnH 1	2183	
H31	EN-GJN-HV520	0.9620	0.9620	G-X330 NiCr 4 2	FB Ni4 Cr2 BC	Grade 2 A			05 12-00	F45001
	EN-GJN-HV550	0.9625	0.9625	G-X260 NiCr 4 2	FB Ni4 Cr2 HC	Grade 2 B			05 13-00	F45000
	EN-GJN-HV600(XCr11)	0.9630	0.9630	G-X300 CrNiSi 9 5 2	FB Cr9 Ni5	Grade 2 C, D, E			04 57-00	F45003

SMG

U.N.E./ I.H.A.	AISI / ASTM	GOST	ČSN	Misc. Brands	Condition	Structure
				Discalloy	Precipitation hardened	
				Haynes 25		
				Stellite 21		
				Hastelloy C		
		KHN65MV		Hastelloy C-276		
				IN 100		
				Inconel 718		
				Inconel X-750	Solution annealed	
				Nimonic 80A		
				René 41		
				Udimet 500		
				Waspalloy		
				Ti	Commercially pure	Ti (α)
	AMS 4919			Ti 6-2-4-2	Annealed	Ti (α)
	AMS 4943			Ti 3Al-2.5V (grd 9)	Annealed	Ti (α+β)
	AMS 4920, Grade 5	VT6		Ti 6Al-4V	Annealed	Ti (α+β)
	AMS 4986			Ti 10V-2Fe-3Al	Annealed	Ti (β)
F.1516	5115	12KHN2	14 220		Case hardened	
F.5103	1070	70			Quenched & Tempered	
F.5107	1078, 1080	75			Quenched & Tempered	
F.5117	1095				Quenched & Tempered	
F.5118	W1	U10A			Quenched & Tempered	
	S1	5KHV2SF			Quenched & Tempered	
	5155				Quenched & Tempered	
F.1252	4142, 4140	38HM	15 142		Quenched & Tempered	
F.520L	L2	11KHF			Quenched & Tempered	
F.5220	O1	9KHVG			Quenched & Tempered	
	O2	9G2F			Quenched & Tempered	
F.5230	52100	SHKH15	14 109		Quenched & Tempered	
F.5318	H13	4KH5MF1S			Quenched & Tempered	
F.5227	A2	9KH5VF			Quenched & Tempered	
F.5211	D2	KH12MF			Quenched & Tempered	
F.5213		KH12			Quenched & Tempered	
		KH12MF			Quenched & Tempered	
F.520.S	L6	5KHNM			Quenched & Tempered	
F.5613	M35	R6M5K5			Quenched & Tempered	
	M42	R2AM9K5			Quenched & Tempered	
	T1	R18			Quenched & Tempered	
F.5261	420	20KH13	17 022		Quenched & Tempered	Martensitic
	440 A				Quenched & Tempered	Martensitic
	440 B	95KH18			Quenched & Tempered	Martensitic
	440 C	95KH18			Quenched & Tempered	Martensitic
	XM-12			15-5 PH	H900	Martensitic
	SAE 630			17-4 PH	H1025	Martensitic
	SAE 630			17-4 PH	H900	Martensitic
	AMS 5528	09KH17N7YU1		17-7 PH	TH1050	Martensitic
	632			PH 15-7 Mo	TH1050	Martensitic
	660			A286	Precipitation hardened	Austenitic
	AMS 6512			Marage 250	Precipitation hardened	Martensitic
	AMS 6521			Marage 300	Precipitation hardened	Martensitic
	AMS 6521			Marage 300	Precipitation hardened	Martensitic
	AMS 6515			Marage 350	Precipitation hardened	Martensitic
	A128 Grade A			Hadfield		
	A532 IB (NiCr-LC			Ni-Hard 2		White cast iron
	A532 IA (NiCr-HC)			Ni-Hard 1		White cast iron
	A532 ID (Ni-HiCr)			Ni-Hard 4		White cast iron

Declaration of conformity

Cemented carbide inserts and insert carriers

Cemented carbide inserts and cemented carbide insert carriers from Seco Tools are not included in the product range intended for the following requirements. Nevertheless Seco Tools can make the following declaration.
These products meet all requirements in RoHS (Restriction of the use of certain Hazardous Substances in electrical and electronic equipment), WEEE (Waste Electrical & Electronic Equipment) and ELV (End of Life Vehicles) requirements.
Products do not contain mercury, lead, hexavalent chromium, cadmium, CFC, HCFC, flame retardants or solvents in concentrations that exceed specifications in the regulations.

Regrinding:
Wet or dry grinding can produce potentially hazardous dusts or mists that can irritate skin, eyes, nose, throat and result in lung damage or disease. To avoid injury use proper safety precautions and protective equipment.

Disposal:
Seco Tools will buy back used inserts and solid carbide tools for recycling. Inserts and solid carbide tools should be separated from other metal waste (steel, aluminium, copper etc).
All packing material is fully recyclable.

CBN and PCD inserts

Inserts from Seco Tools are not included in the product range intended for the following requirements. Nevertheless Seco Tools can make the following declaration.
This product meets all requirements in RoHS (Restriction of the use of certain Hazardous Substances in electrical and electronic equipment), WEEE (Waste Electrical & Electronic Equipment) and ELV (End of Life Vehicles) requirements.
Products do not contain mercury, lead, hexavalent chromium, cadmium, CFC, HCFC, flame retardants or solvents in concentrations that exceed specifications in the regulations.

Regrinding:
Wet or dry grinding can produce potentially hazardous dusts or mists that can irritate skin, eyes, nose, throat and result in lung damage or disease. To avoid injury use proper safety precautions and protective equipment.

Disposal:
Seco Tools will buy back used CBN- or PCD-tipped inserts for recycling. Inserts should be separated from other metal waste (steel, aluminium, copper etc). Solid CBN-inserts may be discarded as landfill waste.
All packing material is fully recyclable.

Black oxide insert carriers

Insert carriers from Seco Tools are not included in the product range intended for the following requirements. Nevertheless Seco Tools can make the following declaration.
This product meets all requirements in RoHS (Restriction of the use of certain Hazardous Substances in electrical and electronic equipment), WEEE (Waste Electrical & Electronic Equipment) and ELV (End of Life Vehicles) requirements.
Products do not contain mercury, lead, hexavalent chromium, cadmium, CFC, HCFC, flame retardants or solvents in concentrations that exceed specifications in the regulations.

Disposal:
Used insert carriers may be sent for recycling together with ordinary steel waste (swarf and discarded steel scrap) for recycling.
All packing material is fully recyclable.

Declaration of conformity

Cermet inserts

Inserts from Seco Tools are not included in the product range intended for the following requirements. Nevertheless Seco Tools can make the following declaration.
This product meets all requirements in RoHS (Restriction of the use of certain Hazardous Substances in electrical and electronic equipment), WEEE (Waste Electrical & Electronic Equipment) and ELV (End of Life Vehicles) requirements.
Cermet grade C15M inserts do contain nickel and will leach nickel when in contact with the skin. Amount of leaching is higher than specified in norm SS-EN 1811 Reference test method for release of nickel from products intended to come into direct and prolonged contact with the skin.
These norms are intended for products that are in direct and prolonged contact with the skin and are therefore not directly applicable for cermet inserts. Persons with known allergic reactions to nickel are advised to wear protective gloves when handling cermet inserts.

Regrinding:
Wet or dry grinding can produce potentially hazardous dusts or mists that can irritate skin, eyes, nose, throat and result in lung damage or disease. To avoid injury use proper safety precautions and protective equipment.

Disposal:
Used inserts may be recycled. Inserts should be separated from other metal waste (steel, aluminium, copper, etc) including cemented carbide inserts.
All packing material is fully recyclable.

Nickel coated insert carriers

Insert carriers from Seco Tools are not included in the product range intended for the following requirements. Nevertheless Seco Tools can make the following declaration.
This product meets all requirements in RoHS (Restriction of the use of certain Hazardous Substances in electrical and electronic equipment), WEEE (Waste Electrical & Electronic Equipment) and ELV (End of Life Vehicles) requirements.
Products do not contain mercury, lead, hexavalent chromium, cadmium, CFC, HCFC, flame retardants or solvents in concentrations that exceed specifications in the regulations.
Insert carriers do contain nickel and will leach nickel when in contact with the skin. Amount of leaching is not higher then norm SS-EN 1811 Reference test method for release of nickel from products intended to come into direct and prolonged contact with the skin.
These norms are intended for products that are in direct and prolonged contact with the skin and are therefore not directly applicable for insert carriers. Persons with known allergic reactions to nickel are advised to wear protective gloves when handling nickel coated insert carriers.

Disposal:
Used tools maybe sent for recycling together with ordinary steel waste (swarf and discarded steel scrap) for recycling.
All packing material is fully recyclable.

Intentionally added alloying elements

Grade	Cemented carbide											Coating						
	W	Ti	Ta	Nb	Co	Cr	Ni	Mo	C	N	Ru	Ti	Al	C	N	O	Si	Nb
CP20	■				■				■			■			■			
CP200	■				■	■			■			■	■		■			
CP300	■	■	■	■	■				■			■	■		■			
CP500	■				■	■			■			■	■		■			
CP600	■				■	■			■			■	■		■			
C15M	■	■	■	■	■		■	■	■	■								
CF	■		■		■		■	■	■									
CM	■		■		■		■	■	■									
DP2000	■		■	■	■				■			■	■	■	■	■		
DP3000	■	■	■	■	■				■	■		■	■	■	■	■		
DS2050	■				■	■			■			■	■		■			■
DS4050	■				■	■			■			■	■		■			■
F15M	■				■	■			■			■	■		■			
F25M	■	■	■	■	■				■			■	■		■			
F30M	■				■	■			■			■	■		■			
F40M	■				■	■			■			■	■		■			
HX	■		■		■				■									
H02	■		■		■	■			■									
H15	■				■	■			■									
H25	■				■	■			■									
KX	■				■	■			■									
MH1000	■				■	■			■			■	■		■			
MK1500	■		■		■				■			■	■	■	■	■		
MK2050	■		■		■	■			■			■	■		■		■	
MM4500	■				■	■			■			■	■	■	■	■		
MP1501	■		■	■	■				■			■	■	■	■	■		
MP2050	■				■						■	■	■		■		■	
MP2501	■		■	■	■				■			■	■	■	■	■		
MP3000	■				■	■			■			■	■		■			
MS2500	■		■	■	■				■			■	■	■	■	■		
MS2050	■				■	■			■			■	■		■			■
RX1500	■		■		■		■	■	■			■	■		■			
RX2000	■		■		■	■			■			■	■		■			
RM2020	■				■				■			■						
RM2090	■				■	■			■			■	■				■	
RN2010	■				■	■			■									
RS2090	■				■	■			■			■	■				■	
T350M	■		■	■	■				■			■	■	■	■	■		
T25M	■		■	■	■				■			■		■	■			
TGH1050	■				■	■			■			■	■		■		■	
TGK1500	■		■		■				■			■	■	■	■	■		
TGP25	■	■	■	■	■				■			■	■	■	■	■		
TGP35	■		■	■	■				■			■	■	■	■	■		
TGP45	■		■	■	■				■			■	■	■	■	■		
TH1000	■				■	■			■			■	■		■		■	
TH1500	■				■	■			■			■	■	■	■	■		
TK0501	■				■	■			■			■	■	■	■	■		
TK1501	■		■		■	■			■			■	■	■	■	■		
TM1501	■	■	■	■	■	■			■	■		■	■	■	■	■		
TM2000	■	■	■	■	■				■	■		■	■	■	■	■		
TM2501	■	■	■	■	■				■	■		■	■	■	■	■		
TM3501	■				■				■			■	■	■	■	■		
TM4000	■	■	■	■	■				■	■		■	■	■	■	■		
TP0501	■	■	■	■	■	■			■			■	■	■	■	■		
TP1020	■	■	■	■	■				■	■								
TP1030	■	■	■	■	■				■	■		■	■		■		■	
TP1501	■	■	■	■	■				■	■		■	■	■	■	■		
TP25	■	■	■	■	■	■			■	■		■	■	■	■	■		
TP200	■	■	■	■	■				■	■		■	■	■	■	■		
TP2501	■	■	■	■	■	■			■	■		■	■	■	■	■		
TP3501	■	■	■	■	■				■	■		■	■	■	■	■		
TP40	■		■	■	■				■			■		■	■			
TS2000	■				■	■			■			■	■		■			
TS2050	■				■	■			■			■	■		■		■	
TS2500	■		■		■				■			■	■		■			
T250D	■				■	■			■			■	■		■			
T400D	■				■	■			■			■	■		■			
T100R	■		■		■	■			■			■	■		■			
T60M	■	■	■	■	■				■			■	■		■			
883	■		■		■				■									
890	■				■	■			■									

This work is published with the understanding that Seco Tools and its editors are supplying information aimed to present a general orientation and direction of metal cutting and related sciences. If professional services are required for specific applications, the assistance of an appropriate professional should be acquired.

The information is provided “as is”;
Seco Tools and its editors disclaim all representations and warranties, express or implied, of any kind, including, without limitations, any warranties of merchantability, fitness for a particular purpose, title, or non-infringement. In no event will Seco Tools or its editors be liable to any party for any direct, indirect, special or other consequential damages for any use of the information, even if Seco Tools or its editors are advised of the possibility of such damage.

The information provided herein is for reference purposes only. Actual prices, specifications, and product descriptions are finalised at the time of sale and may vary by location.
The information provided herein is subject to change without prior notice.

WWW.SECOTOOLS.COM

03335021, ST20196724 GB,
© SECO TOOLS AB, 2020. All rights reserved.
Technical specifications are subject to
change without notice.