MST 200
USER MANUAL

BOSSWELD

RELIABLE WELDING GEAR

www.bossweld.com.au

STATEMENT OF WARRANTY

LIMITED WARRANTY: "Dynaweld" warrants to customers of its authorised distributors hereafter "Dynaweld" that its products will be free of defects in workmanship or material. Should any failure to conform to this warranty appear within the time period applicable to the Dynaweld products as stated below, Dynaweld shall, upon notification thereof and substantiation that the product has been stored, installed, operated, and maintained in accordance with Dynaweld's specifications, instructions, recommendations and recognized standard industry practice, and not subject to misuse, repair, neglect, alteration, or accident, correct such defects by suitable repair or replacement, at Dynaweld's sole option, of any components or parts of the product determined by Dynaweld to be defective.

THE DYNAWELD COMPANY MAKES NO OTHER WARRANTY, EXPRESS OR IMPLIED. THIS WARRANTY IS EXCLUSIVE AND IN LIEU OF ALL OTHERS, INCLUDING, BUT NOT LIMITED TO ANY WARRANTY OF MERCHANTABILITY OR FITNESS FOR ANY PARTICULAR PURPOSE.

LIMITATION OF LIABILITY: Dynaweld shall not under any circumstances be liable for special, indirect or consequential damages, such as, but not limited to, lost profits and business interruption. The remedies of the Purchaser set forth herein are exclusive and the liability of Dynaweld with respect to any contract, or anything done in connection therewith such as the performance or breach thereof, or from the manufacture, sale, delivery, resale, or use of any goods covered by or furnished by Dynaweld whether arising out of contract, negligence, strict tort, or under any warranty, or otherwise, shall not, except as expressly provided herein, exceed the price of the goods upon which such liability is based. No employee, agent, or representative of Dynaweld is authorized to change this warranty in any way or grant any other warranty.

PURCHASER'S RIGHTS UNDER THIS WARRANTY ARE VOID IF REPLACEMENT PARTS OR ACCESSORIES ARE USED WHICH IN DYNAWELD'S SOLE JUDGEMENT MAY IMPAIR THE SAFETY OR PERFORMANCE OF ANY DYNAWELD PRODUCT. PURCHASER'S RIGHTS UNDER THIS WARRANTY ARE VOID IF THE PRODUCT IS SOLD TO PURCHASER BY NON-AUTHORIZED PERSONS.

WARRANTY PERIODS

The warranty is effective for the time stated below beginning on the date that the authorized distributor delivers the products to the Purchaser. Notwithstanding the foregoing, in no event shall the warranty period extend more than the time stated plus one year from the date Dynaweld delivered the product to the authorized distributor.

POWER SUPPLIES & WIRE FEEDERS	2 YEAR
MAIN POWER MAGNETICS (STATIC & ROTATING)	2 YEAR
ORIGINAL MAIN POWER RECTIFIER	2 YEAR
POWER SWITCHING SEMI-CONDUCTORS & CONTROL PC BOARD	2 YEAR
ALL OTHER CIRCUITS AND COMPONENTS INCLUDING	2 YEAR

BUT NOT LIMITED TO, CONTACTORS, RELAYS, SOLENOIDS, PUMPS, SWITCHES, MOTORS

Warranty repairs or replacement claims under this limited warranty must be submitted to Dynaweld by an authorised Dynaweld repair facility within thirty (30) days of purchaser's notice of any Warranty Claim. No transportation costs of any kind will be paid under this warranty. Transportation charges to send products to an authorised warranty repair facility shall be the responsibility of the Purchaser. All returned goods shall be at the Purchaser's risk and expense. This warranty supersedes all previous Dynaweld warranties.

CONTENT

1 Safety 1

1.1 Signal Explanation 1

1.2 Arc Welding Damage 1

1.3 The knowledge of Electric and Magnetic Fields 5

2 Overview 7

2.1 Brief Introduction 7

2.2 Working Principle 8

2.3 Volt-Ampere Characteristic 8

3 Installation and Adjustment 10

3.1 Parameters 10

3.2 Duty cycle and Over-heat 10

3.3 Equipment Connection 11

4 Operation 15

4.1 Layout for the front and rear panel 15

4.2 Welding operation 17

4.3 Welding parameters 19

4 .4Operation environment 20

4.5 Operation Notices 20

5 Maintenance & Troubleshooting 21

5.1 Maintenance 21

5.2 Troubleshooting 22

5.3Electrical schematic drawing 24

1 Safety

1.1 Signal Explanation

• The above signals mean warning! Notice! Running parts and getting an electric shock or thermal parts will take damage for your body or others. The corresponding notices are as follows. It is quite a safe operation after taking several necessary protection measures.

1.2 Arc Welding Damage

• The following signals and word explanations are to some damages for your body or others happening on the welding operation. While seeing these, please remind of yourself or others to be dangerous.

• Only ones who are trained professionally can install, debug, operate, maintain and repair the equipment.

• During the operation, non-concerned people should be lift, especially for children.

• After shut off the machine power, please maintain and examine the equipment according to 5 because of the DC voltage existing in the electrolytic capacitors.

ELECTRIC SHOCK CAN KILL.

• Never touch electrical parts.

• Wear dry, hole-free gloves and clothes to insulate yourself.

• Insulate yourself from work and ground using dry insulation. Make certain the insulation is large enough to cover your full area of physical contact with work and ground.

• Take carefully when using the equipment in small place, falling-off and wet circumstance.

• Never close the machine power before installation and adjustment.

Ensure to install the equipment correctly and ground the work or metal to be welded to a good electrical (earth) ground according the operation manual.

- The electrode and work (or ground) circuits are electrically “hot” when the welder is on. Do not touch these “hot” parts with your bare skin or wet clothing. Wear dry, hole-free gloves to insulate hands.
- In semiautomatic or automatic wire welding, the electrode, electrode reel, welding head, nozzle or semiautomatic welding gun are also electrically “hot”.
- Always be sure the work cable makes a good electrical connection with the metal being welded. The connection should be as close as possible to the area being welded.
- Maintain the electrode holder, work clamp, welding cable and welding machine in good, safe operating condition. Replace damaged insulation.
- Never dip the electrode in water for cooling.
- Never simultaneously touch electrically “hot” parts of electrode holders connected to two welders because voltage between the two can be the total of the open circuit voltage of both welders.
- When working above the floor level, use a safety belt to protect yourself from a fall should you get a shock.

FUMES AND GASES CAN BE DANGEROUS.

- Welding may produce fumes and gases hazardous to health. Avoid breathing these fumes and gases. When welding, keep your head out of the fume. Use enough ventilation and/or exhaust at the arc to keep fumes and gases away from the breathing zone. When welding with electrodes which require special ventilation such as stainless or hard facing or on lead or cadmium plated steel and other metals or coatings which produce highly toxic fumes, keep exposure as low as possible and below Threshold Limit Values using local exhaust or mechanical ventilation. In confined spaces or in some circumstances, outdoors, a respirator may be required. Additional precautions are also required when welding on galvanized steel.
- Do not weld in locations near chlorinated hydrocarbon vapors coming from

degreasing, cleaning or spraying operations. The heat and rays of the arc can react with solvent vapors to form phosgene, a highly toxic gas, and other irritating products.

- Shielded gases used for arc welding can displace air and cause injury or death. Always use enough ventilation, especially in confined areas, to insure breathing air is safe.
- Read and understand the manufacturer's instructions for this equipment and the consumables to be used, including the material safety data sheet and follow your employer's safety practices.

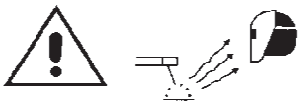

ARC RAYS CAN BURN.

- Use a shield with the proper filter and cover plates to protect your eyes from sparks and the rays of the arc when welding or observing open arc welding.
- Use suitable clothing made from durable flame-resistant material to protect your skin and that of your helpers from the arc rays.
- Protect other nearby personnel with suitable, non-flammable screening and /or warn them not to watch the arc nor expose themselves to the arc rays or to hot spatter or metal.

SELF-PROTECTION

- Keep all equipment safety guards, covers and devices in position and in good repair. Keep hands, hair, clothing and tools away from V-belts, gears, fans and all other moving parts when starting, operating or repairing equipment.
- Do not put your hands near the engine fan. Do not attempt to override the governor or idler by pushing on the throttle control rods while the engine is running.

DO NOT adds the fuel near an open flame welding arc or when the engine is running. Stop the engine and allow it to cool before refueling to prevent spilled fuel from vaporizing on contact with hot engine parts and igniting.

Do not spill fuel when filling tank. If fuel is spilled, wipe it up and do not start engine until fumes have been eliminated.

WELDING SPARKS can cause fire or explosion.

- Remove fire hazards from the welding area. If this is not possible, cover them to prevent the welding sparks from starting a fire. Remember that welding sparks and hot materials from welding can easily go through small cracks and openings to adjacent areas. Avoid welding near hydraulic lines. Have a fire extinguisher readily available.
- Where compressed gases are to be used at the job site, special precautions should be used to prevent hazardous situation.
- When not welding, make certain no part of the electrode circuit is touching the work or ground. Accidental contact can cause overheating and create a fire hazard.
- Do not heat, cut or weld tanks, drums or containers until the proper steps have been taken to insure that such procedures will not cause flammable or toxic vapors from substances inside. They can cause an explosion even though they have been “cleaned”.
- Vent hollow castings or containers before heating, cutting or welding. They may explode.
- Sparks and spatter are thrown from the welding arc. Wear oil free protective garments such as leather gloves, heavy shirt, cuff less trousers, high shoes and a cap over your hair. Wear ear plugs when welding out of position or in confined places. Always wear safety glasses with side shields when in a welding area.
- Connect the work cable to the work as close to the welding area as practical. Work cables connected to the building framework or other locations away from the welding area increase the possibility of the welding current passing through lifting chains, crane cables or other alternate circuits. This can create fire hazards or overheat lifting chains or cables until they fail.

Rotating parts may be dangerous.

- Use only compressed gas cylinders containing the correct shielding gas for the process used and properly operating regulators designed for the gas and pressure used. All hoses, fittings, etc. should be suitable for the application and maintained in good condition.
- Always keep cylinders in an upright position securely chained to an undercarriage or fixed support.
- Cylinders should be located:
  - Away from areas where they may be struck or subjected to physical damage.
  - A safe distance from arc welding or cutting operations and any other source of heat, sparks, or flame.
- Never allow the electrode, electrode holder or any other electrically “hot” parts to touch a cylinder.
- Keep your head and face away from the cylinder valve outlet when opening the cylinder valve.
- Valve protection caps should always be in place and hand tight except when the cylinder is in use or connected for use.

1.3 The knowledge of Electric and Magnetic Fields

Electric current flowing through any conductor causes localized Electric and Magnetic Fields (EMF). The discussion on the effect of EMF is ongoing all the world. Up to now, no material evidences show that EMF may have effects on health. However, the research on damage of EMF is still ongoing. Before any conclusion, we should minimize exposure to EMF as few as possible.

In order to minimize EMF, we should use the following procedures:

- Route the electrode and work cables together – Secure them with tape when possible.
- All cables should be put away and far from the operator.

- Never coil the power cable around your body.
- Make sure welding machine and power cable to be far away from the operator as far as possible according to the actual circumstance.
- Connect the work cable to the workpiece as close as possible to the area being welded.
- The people with heart-pacemaker should be away from the welding area.

2 Overview

2.1 Brief Introduction

MIG SERIES arc welding machine adopts the latest pulse width modulation (PWM) technology and insulated gate bipolar transistor (IGBT) power module, which can change work frequency to medium frequency so as to replace the traditional hulking work frequency transformer with the cabinet medium frequency transformer. Thus, it is characterized with portable, small size, light weight, low consumption and etc.

MIG SERIES arc welding machine uses Mix gas as shielded gas to realize gas shielded welding, active gas（$Ar+O_2$、$Ar+CO_2$） as shielded gas to realize MAG welding and inactive gas（Ar）as shielded gas to realize MIG welding.

MIG SERIES arc welding machine has automatic protection functions with intelligent to over-voltage, over-current and over-heat. If any one of the above problems happens, the alarm lamp on the front panel will be lighted and output current will be shut off automatically to protect itself and prolong the equipment using life.

MIG SERIES Features:

1. Digital control system, real-time display the welding parameters;
2. High performance multifunction power source (MMA/MIG/MAG);
3. Waveform control, stable welding arc;
4. IGBT technology, low power dissipation;
5. Rated duty circle is 40%(40℃).

MULTIMIG 160/200 has another feature: Synergic control of the welding current and voltage.

MIG SERIES arc welding machine is suitable for all positions welding for various plates made of stainless steel, carbon steel, alloyed steel, copper, titanium, etc, which is also applied to pipe installment, mould mend, petrochemical, architecture decoration, car repair, bicycle, handicraft and common manufacture.

MAG--Metal Active Gas Welding

MIG--Metal Insert Gas Welding

2.2 Working Principle

The working principle of MIG SERIES arc welding machine is shown as the following figure. Single-phase 220V work frequency AC is rectified into DC（350V）, then is converted to medium frequency AC (about 40KHz) by inverter device (IGBT), after reducing voltage by medium transformer (the main transformer) and rectifying by medium frequency rectifier (fast recovery diodes), and is outputted by inductance filtering. The circuit adopts current feedback control technology to insure current output stably when MMA or TIG. And adopts voltage feedback control technology to insure voltage output stably when MIG. Meanwhile, the welding current parameter can be adjusted continuously and infinitely to meet with the requirements of welding craft.

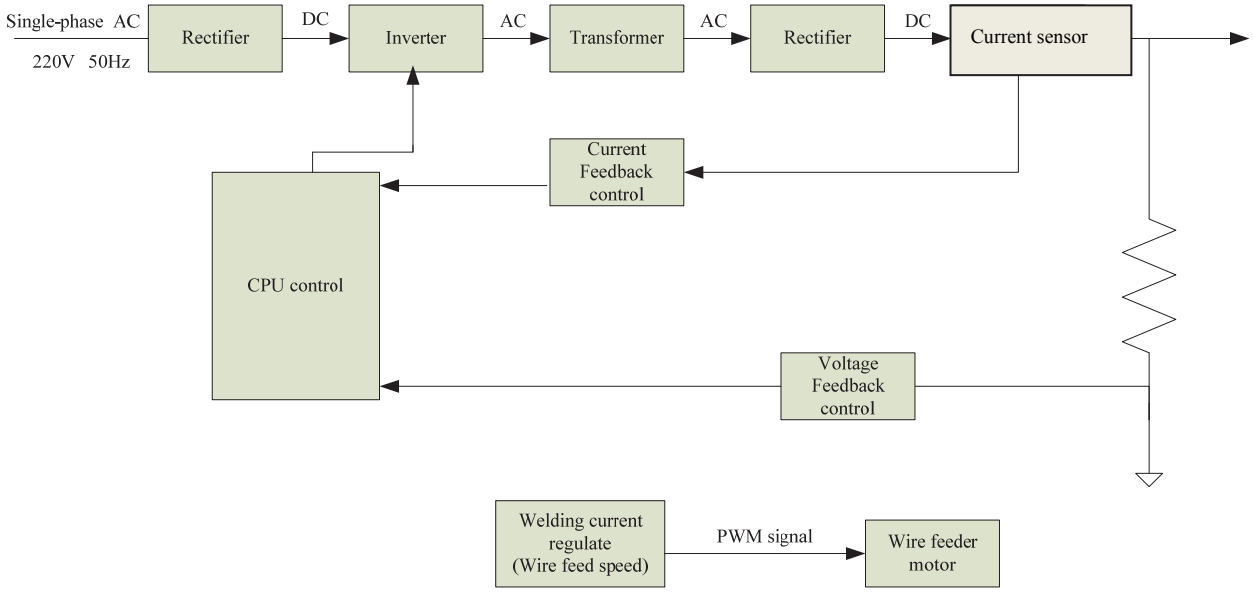

2.3 Volt-Ampere Characteristic

MIG SERIES welding machine has an excellent volt-ampere characteristic, whose graph is shown as the following figure. The relation between the rated loading voltage U_2 and welding current I_2 is as follows: $U_2=14+0.05I_2$(V)

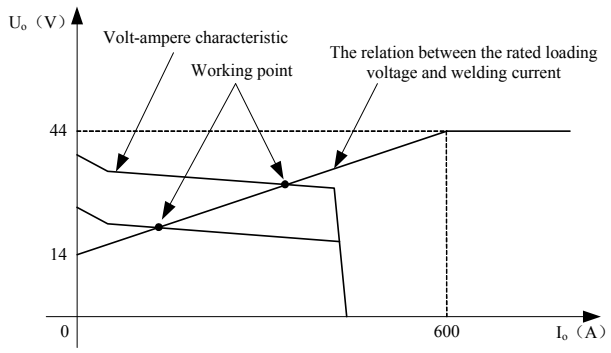

2.4Principles of welding

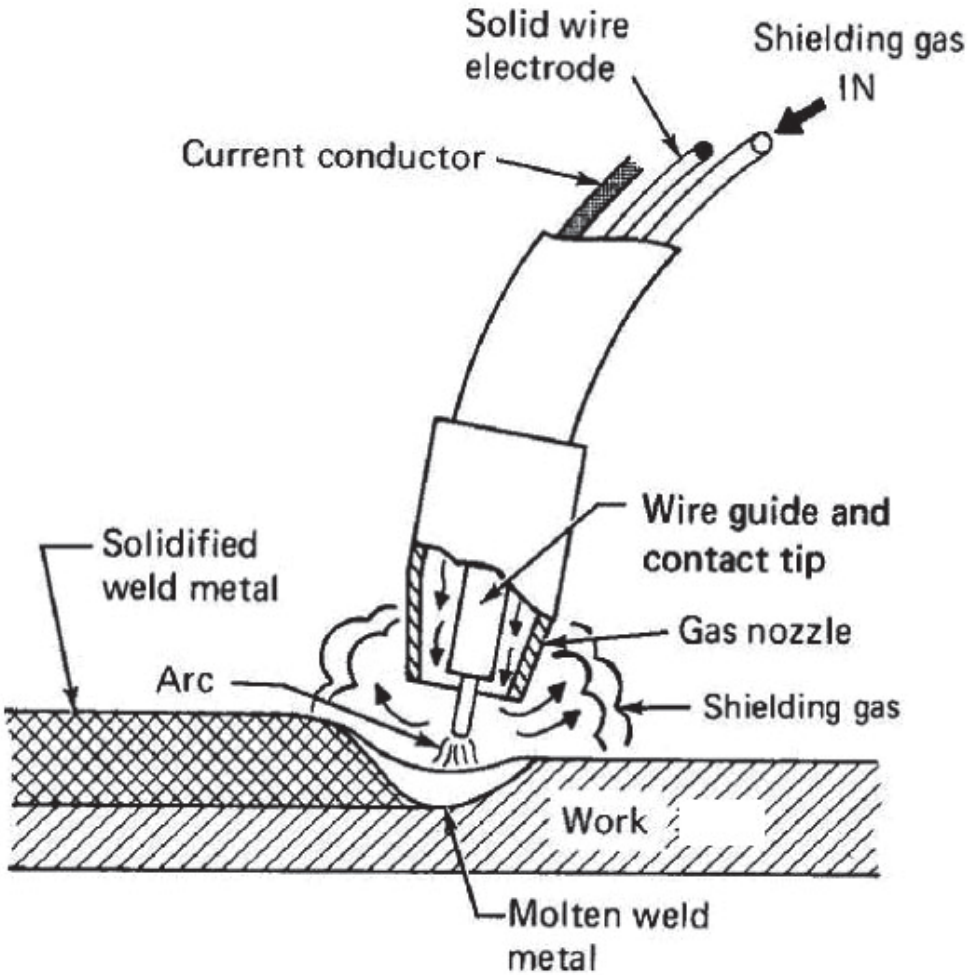

3 Installation and Adjustment

3.1 Parameters

Model / Parameters	MultiMIG200PFC		MultiMIG250PFC	
Input Voltage（V）	1-110±10%	1-220±10%	1-110±10%	1-220±10%
Input Current（A）	MIG 31.7 MMA 32 TIG 19	MIG 26 MMA 30 TIG 19.5	MIG 43 MMA 37 TIG 32	MIG 43 MMA 44 TIG 36
Input Power（KW）	MIG 3.4 MMA 3.5 TIG 2.1	MIG 5.7 MMA 6.6 TIG 4.2	MIG 4.7 MMA 4.0 TIG 3.5	MIG 9.4 MMA 9.6 TIG 7.9
Welding Current（A）	MIG 40-140 MMA 10-110 TIG 10-150	MIG 40-200 MMA 10-200 TIG 10-200	MIG 40-160 MMA 10-130 TIG 10-130	MIG 40-250 MMA 10-250 TIG 10-250
No-load Voltage（V）	66	66	66	66
Duty cycle（40℃）	MIG 140A30% MMA 110A30% TIG 150A40%	MIG 200A30% MMA 200A25% TIG 200A35%	MIG 160A35% MMA 130A30% TIG 140A35%	MIG 250A35% MMA 250A30% TIG 250A35%
Diameter(mm)	Fe ：0.6、0.8、0.9、1.0 、1.2 Ss 0.8、0.9、1.0 、1.2			
Protection class	IP23			
Insulation class	H			
Dimensions（mm）	550*214*395		635*240*430	
Weight（Kg）	12.5		25	

Note: The above parameters are subject to change with the improvement of machines.

3.2 Duty cycle and Over-heat

The letter “X” stands for the duty cycle, which is defined as the proportion of the time that a machine can work continuously within a certain time (10 minutes). The rated duty cycle means the proportion of the time that a machine can work continuously within 10 minutes when it outputs the rated welding current.

The relation between the duty cycle “X” and the output welding current “I” is shown as the right figure.

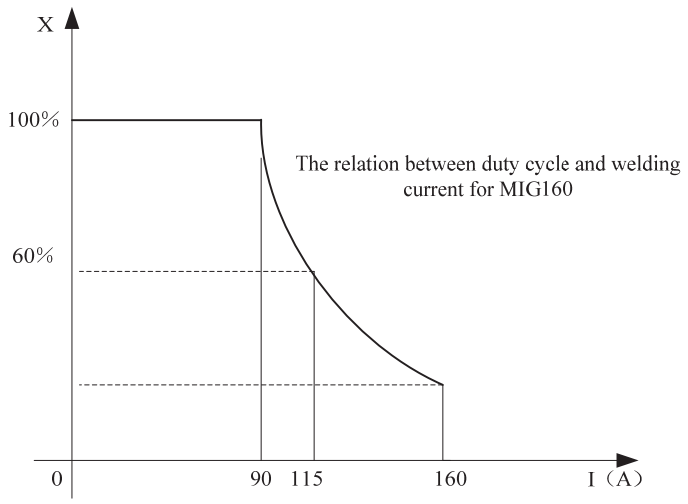

If transformer is over-heat, the heat relay inside it will open and will output an instruction to circuit board, cut AC relay and the output welding current, and brighten the over-heat pilot lamp in the front panel. At this time, the machine should be relaxed for 15 minutes to cool the fan. When operating the machine again, the welding output current or the duty cycle should be reduced.

3.3 Equipment Connection

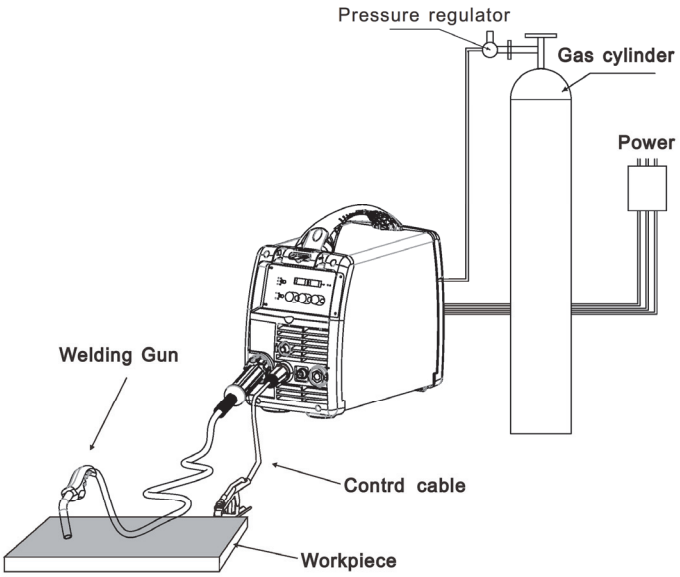

Operation Steps：

1、Connect the power source input cable of welding machine with the output port of air switch in electric box on the spot.

2、Connect the cable plug of wire feeder to the positive output of welding machine.

3、Connect the control cable plug of wire feeder to the aero socket on the front board of welding machine.

4、Connect the negative pole of welding machine to the work piece (base metal).

.

5、Connect the output pipe of gas cylinder to the input joint of gas valve on the wire feeder and clamp it.

6、Insert the torch joint into the output of wire feeder unit and keep the wire aim at the wire feeder mouth.

Note: The plane of the joint should be aimed at screw, plugged tightly and rotated 90º, then screw the bolt tightly to ensure the gun contacting closely.

7、Connect the shielded gas pipe of torch with the output of front panel on wire feeder.

8、Connect the control cable pin of torch with the two-lead aero socket of front panel on wire feeder.

9、Notice that the wire diameter should be accordant with the wire wheel and torch tip and press the wire properly with the handle.

3.4 Maintenance of MIG Gun mechanism

3.4.1 Dissection graphics for the MIG GUN

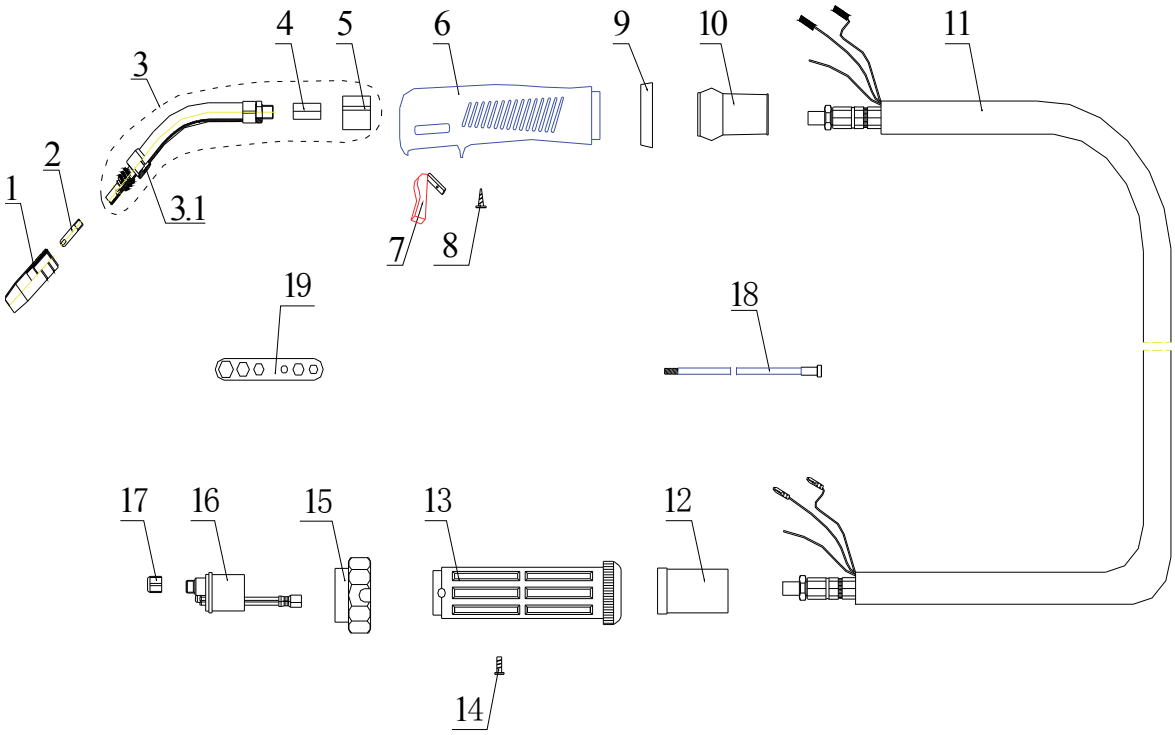

3.4.2 The parts list for the MIG GUN

NO.	Description	QTY.	Remark
1	Tip D.12 14-15AK	1	
2	Electric nozzle 0.8/M6*25	1	
3	15AK Goose gun neck（Hexangular adapter and Plastic adapter）	1	
3.1	15AK Goose gun	1	
4	Hexangular adapter	1	
5	Plastic adapter	1	
6	MIG blue handle	1	
7	Torch Switch 21.8mm	1	
8	Screw D.3*10	3	
9	Handle locking ring	1	
10	Cable fixing joint 15AK	1	
11	Coaxial cable team /16mmq/3m	1	
12	Cable thimble 12-16-25 MMQ	1	
13	CO_2 Euro-rear thimble	1	
14	Screw M4*6 UNI 6107	1	
15	Torch locknut /plastic screw thread	1	
16	Euro-main socket/flexibility pin	1	
17	Feeding pipe locknut	1	
18	Insulating feed pipe 0.6-0.8 3m, Blue	1	
19	Spanner for the electric nozzle	1	

3.4.3 The operation for the MIG GUN

1. Service the wire feed mechanism at least every time the reel is changed.

• Check the wear of the feed roll groove and change the feed roll when necessary.

• Clean the welding gun wire guide with compressed air.

2. Cleaning the wire guide

Pressure of the feed rolls remove metal dust from the filler wire's surface which then finds its way to the wire guide. If the wire guide is not cleaned, it gradually clogs up and causes wire feed malfunctions. Clean the wire guide in the following manner：

Remove the welding gun's gas nozzle, contact tip and contact tip's adapter.

With a pneumatic pistol, below compressed air through the wire guide.

Blow the wire feed mechanism and reel housing clean with compressed air.

Reattach the welding gun's parts. Tighten the contact tip and contact tip's adapter to spanner tightness.

3. Changing the wire guide

If the wire guide is too worn or totally clogged, change it to a new one according to the following instructions.

Open the mounting nut of the wire guide which exposes the end of the wire guide.

Straighten the welding gun's cable and withdraw the wire guide from the gun.

Push a new wire guide in to the gun. Make sure that the wire guide enters all the way into the contact tip's adapter and that there is an O-ring at the machine-end of the guide.

Tighten the wire guide in place with the mounting nut.

Cut the wire guide 2mm from the mounting nut and file the sharp edges of the cut round.

Reattach the gun in place and tighten the parts to spanner tightness.

4 Operation

4.1 Layout for the front and rear panel

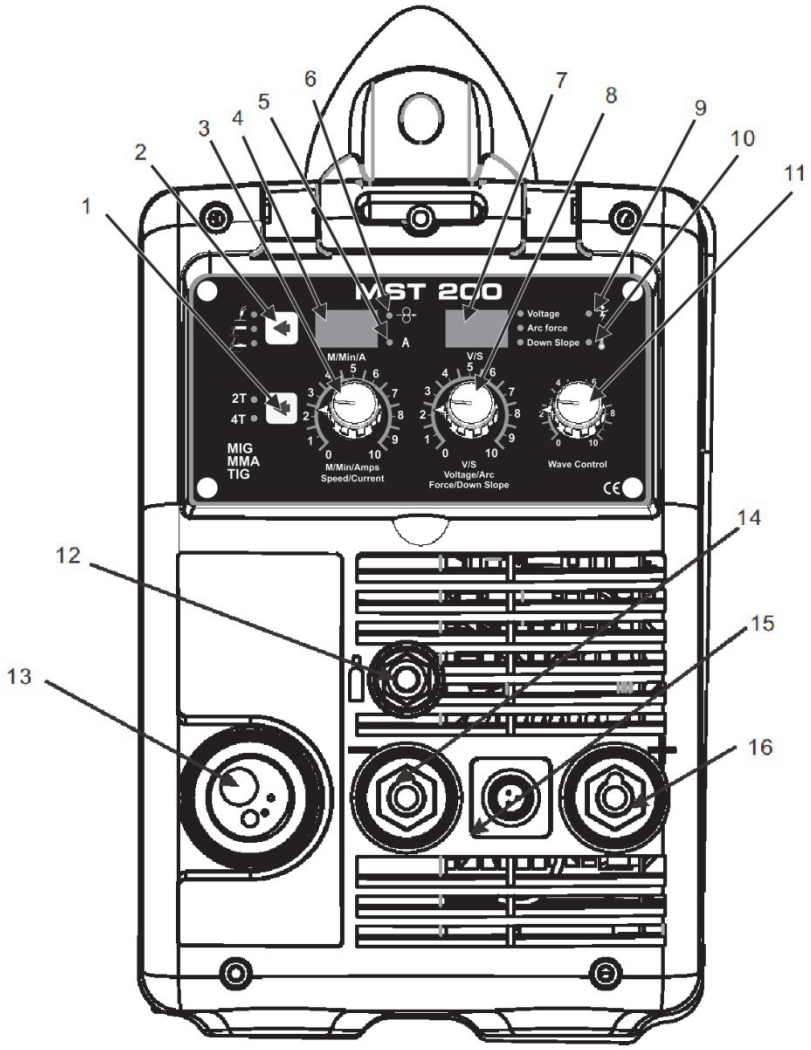

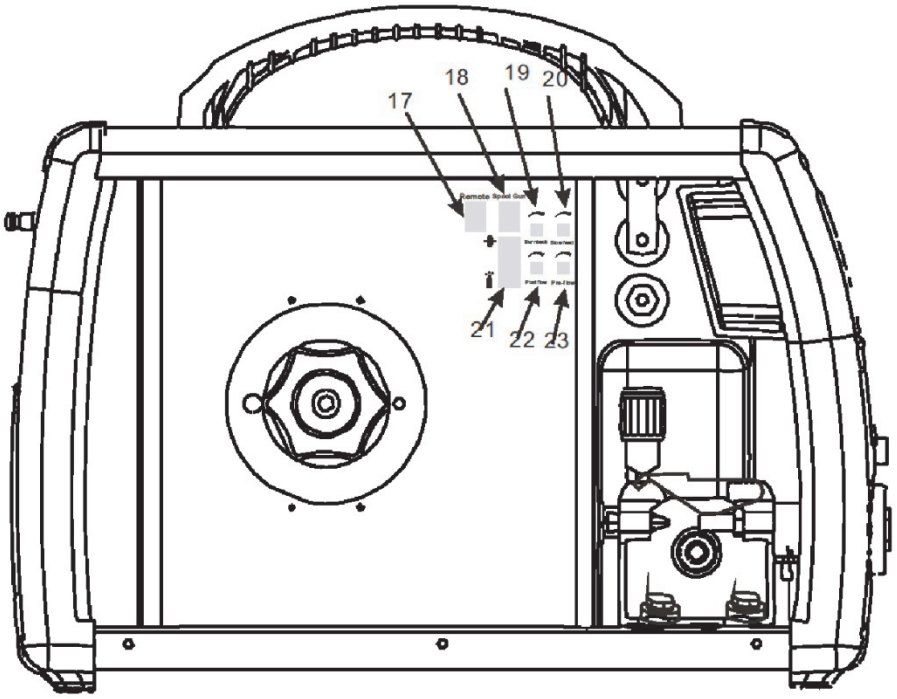

1. Choose welding mode key: On TIG or MIG, Pressing the key can choose 2T or 4T welding mode.

2. Choose welding method key: Pressing the key can choose three function, MMA/TIG/MIG.

3. Welding current knob: Set the welding current.

4. Current display: Welding Current display when machine is working, Set current display before welding. Unit：A.

5. Current LED： When the current LED is on, it display the actual output welding current(MIG).

6. Wire speed LED：You can use current setting knob to set the wire speed when the wire speed LED is on(MIG).

7. Voltage display: Welding voltage display when machine is working, Set voltage display when MIG mode before welding. Unit：V.

8. Welding voltage/Down slope/Arc force knob: On MIG, When the program voltage can't perfectly match the welding current, the knob can adjust voltage On TIG, the knob can adjust the current down time. On MMA, the knob can adjust the force current.

9. Power Led: Power led is lighted when open the machine.

10. Alarm Led: When the welder is over voltage, less voltage, over current or over heated, the alarm pilot lamp will be on.

11. Wave control knob: Controls arc characteristics, Determines the rate at which the amperage rises when a short circuit is produced.

12.TIG GAS Connect

13. MIG GUN Connect.

14. Output cathode：When MIG mode, this polarity must connect the work piece

15. TIG gun control connecter.

16. Output anode: When TIG mode, this polarity must connect the work piece

17.Romote Switch

18.Spool Gun Switch

19.Burnback knob

20.Slow feed knob

21. Manual wire switch & air check switch: up for manual wire and down for air check.

22.Post flow knob

23Pre-flow knob

4.2 Welding operation

For example MULTIMIG 200

4.2.1 MIG mode operation:

1. Shielding Gas choice

1) When the wire material is Fe, the shielding gas is 80%Ar + 20%CO2 ；

2) When the wire material is Ss, the shielding gas is 98%Ar + 2%O2 ；

3) When the wire material is Al, the shielding gas is 100%Ar.

2. Welding state choice

1)Press the weld manner key, choose MIG manner and the MIG LED is lighted；

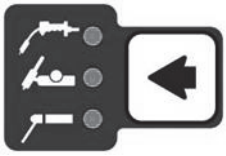

2) Spool Gun Switch turn off(down).

3) Manual wire switch & air check switch，Burnback adjust，Slow feed adjust, Post flow adjust, Pre-flow knob adjust；

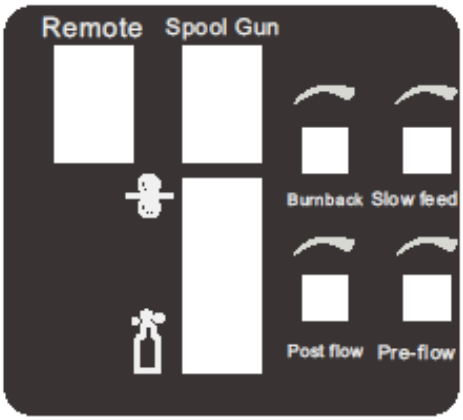

3)Press the welding mode key, choose 2T or 4T；

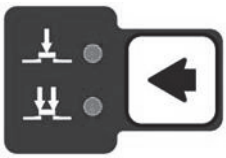

4)Spool Gun Switch turn on(up):

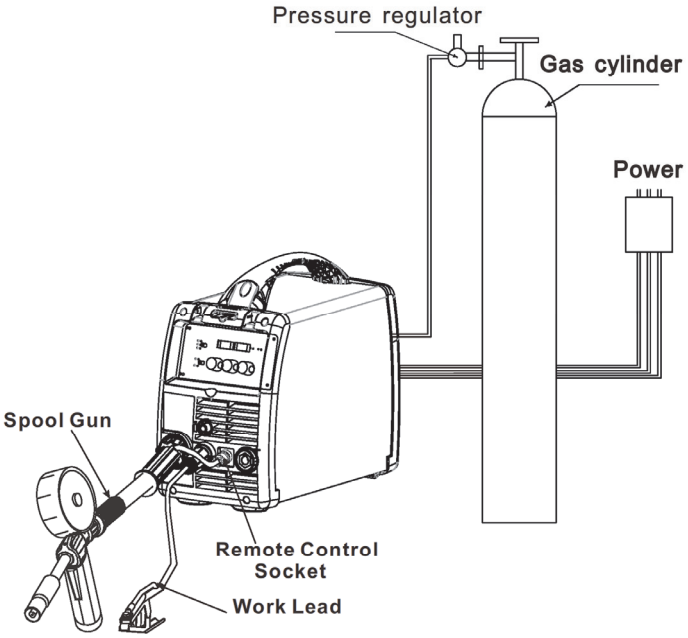

Setup for Spool Gun welding with gas shielded MIG wire

3. Adjust Welding parameter

1) Different wire diameter ,the minimum welding current is different；

2) Adjust the current knob , the corresponding welding voltage is changed automatically；

3) When the programmable welding voltage isn't the perfect for the operator, the voltage can be changed tinily by adjusted the knob；

4) If the operator adjust the wave control knob, the arc characteristics can be controlled；

4.2.2 TIG mode operation:

1. Press the weld manner key, choose TIG manner and the TIG LED is lighted；

2. Press the welding mode key, choose 2T or 4T；

3. Adjust the current knob to control the welding current；

4. Adjust the down slope knob to control the welding current descend time.

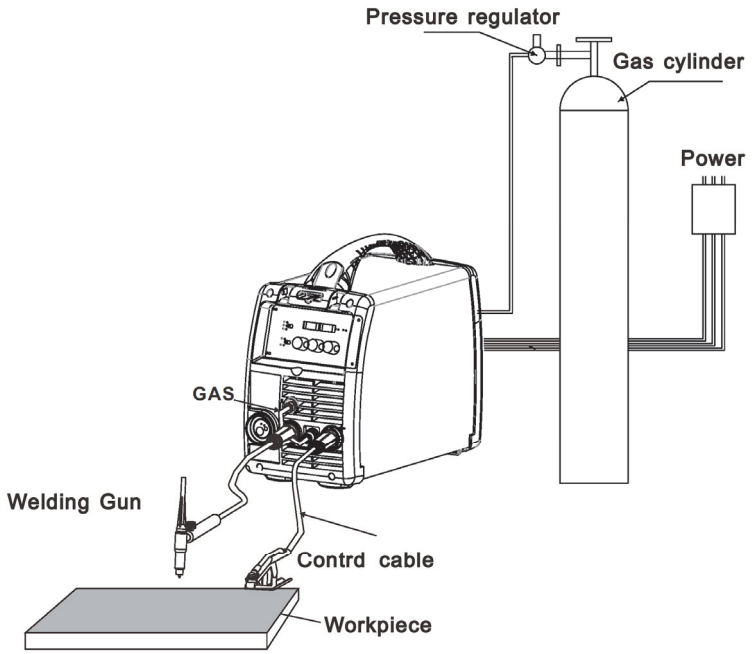

Setup for TIG Welding

4.2.3 MMA mode operation:

1. Press the weld manner key, choose MMA manner and the MMA LED is lighted;
2. Adjust the current knob to control the welding current;
3. Adjust the welding arc force knob to control the arc force current.

Note: The current display is preset current before welding and is welding current when welding. The voltage display is real voltage.

4.3 Welding parameters

Wire diameter (mm)	Welding current (A)	Plate thickness (mm)
0.6	25-110	1.0-1.6
0.8	35-160(200)	1.0-2.3
0.9	45-160(200)	1.0-2.3
1.0	45-160(200)	1.2-6

4 .4Operation environment

▲ Height above sea level ≤1000 M

▲ Operation temperature range -10～+40℃.

▲ Air relative humidity is below 90 %(20℃).

▲ Preferable site the machine some angles above the floor level, the maximum angle does not exceed 15℃.

▲ Protect the machine against heavy rain or in hot circumstance against direct sunshine.

▲ The content of dust, acid, corrosive gas in the surrounding air or substance can not exceed normal standard.

▲ Take care that there is sufficient ventilation during welding. There is at least 30cm free distance between the machine and wall.

4.5 Operation Notices

▲ Read 1 carefully before attempting to use this equipment.

▲Connect the ground wire with the machine directly and refer to 3.5.

▲ Ensure that the input is single-phase:50/60Hz, 220/230/240V ±10%.

▲Before operation, no concerned people should be left. Do not watch the arc in unprotected eyes.

▲ Ensure good ventilation of the machine to improve duty ratio.

▲ Turn off the engine when the operation finished for economize energy sources.

▲When power switch shuts off protectively because of failure. Don't restart it until problem is resolved. Otherwise, the range of problem will be extended.

▲In case of problems, contact your local dealer if no our authorized maintenance man.

5 Maintenance & Troubleshooting

5.1 Maintenance

In order to guarantee that arc welding machine works high-efficiently and in safety, it must be maintained regularly. Let customers understand the maintenance methods and means of arc welding machine more , enable customers to carry on simple examination and safeguarding by oneself, try one's best to reduce the fault rate and repair times of arc welding machine, so as to lengthen service life of arc welding machine .Maintenance items in detail are in the following table.

● **Warning: For safety while maintaining the machine, please shut off the supply power and wait for 5 minutes, until capacity voltage already drop to safe voltage 36V.**

Date	Maintenance items
Daily examination	Observe that whether panel knob and switch in the front and at the back of arc welding machine are flexible and put correctly in place. If the knob has not been put correctly in place, please correct; If you can't correct or fix the knob , please replace immediately; If the switch is not flexible or it can't be put correctly in place, please replace immediately; Please get in touch with maintenance service department if there are no accessories. After turn-on power, watch/listen to that whether the arc welding machine has shaking, whistle calling or peculiar smell. If there is one of the above problems, find out the reason to get rid of; if you can't find out the reason, Please contact local this area agent or the branch company. Observe that whether the display value of LED is intact. If the display number is not intact, please replace the damaged LED. If it still doesn’t work, please maintain or replace the display PCB. Observe that whether the min/max value on LED accords with the set value. If there is any difference and it has affected the normal welding craft, please adjust it. Check up that Whether fan is damaged and is normal to rotate or control. If the fan is damaged, please change immediately. If the fan does not rotate after the arc welding machine is overheated , observe that whether there is something blocked in the blade, if it is blocked, please get rid of ; If the fan does not rotate after getting rid of the above problems, you can poke the blade by the rotation direction of fan. If the fan rotates normally, the start capacity should be replaced; If not, change the fan. Observe that whether the fast connector is loose or overheated. if the arc welding machine has the above problems, it should be fastened or changed. Observe that Whether the current output cable is damaged. If it is damaged, it should be wrapped up, insulated or changed.

Monthly examination	Using the dry compressed air to clear the inside of arc welding machine. Especially for clearing up the dusts on radiator, main voltage transformer, inductance, IGBT module, the fast recover diode and PCB, etc. Check up the bolt in arc welding machine, if it is loose, please screw down it. If it is skid, please replace. If it is rusty, please erase rust on bolt to ensure it works well.
Quarter-yearly examination	Whether the actual current accords with the displaying value. If they did not accord, they should be regulated. The actual current value can be measured by the adjusted plier-type ampere meter.
Yearly examination	Measure the insulating impedance among the main circuit, PCB and case, if it below 1MΩ, insulation is thought to be damaged and need to change , and need to change or strengthen insulation.

5.2 Troubleshooting

- Before arc welding machines are dispatched from the factory, they have already been debugged accurately. So forbid anyone who is not authorized by our company to do any change to the equipment!
- Maintenance course must be operated carefully. If any wire becomes flexible or is misplaced, it maybe potential danger to user!
- Only professional maintenance personal who is authorized by our company could overhaul the machine!
- Guarantee to shut off the arc welding machine's power before turn on the outline of the equipment!
- If there is any problem and has no the authorized professional maintenance personal of our company, please contact our local agent or the branch company!

If there are some simple troubles of MIG SERIES welding machine, you can consult the following Chart:

NO.	Troubles		Reasons	Solution
1	Close the breaker, but the power light isn't on		Breaker damaged	Change it
			Fuse damaged	Change it
			Power damaged	Change it
2	After welding machine is over-heat, the fan doesn't work		Fan damaged	Change it
			The cable is loosen	Screw the cable tightly
3	Press the gun switch, no output shielded gas	No output gas when test gas	No gas in the gas cylinder	Change it
			Gas pipe leaks gas	Change it
			Electromagnetic valve damaged	Change it
		Output gas when test gas	Control switch damaged	Repair the switch
			Control circuit damaged	Check the board
4	Wire-feeder doesn't work	Wire reel doesn't work	Motor damaged	Check and change it
			Control circuit damaged	Check the board
		Wire reel works	The press wheel is loosen or weld wire skids	Press it tightly again
			The wheel doesn't fit with the diameter of weld wire	Change the wheel
			Wire reel damaged	Change it
			Wire feed pipe is jammed	Repair or change it
			Tip is jammed because of splash	Repair or change it
5	No striking arc and no output voltage		Output cable is connected mistakenly, or loosen	Screw it down or change it
			Control circuit damaged	Check the circuit
6	Welding stops, and alarm light is on		Machine has self-protection	Check over-voltage, over-current, over-temperature, lower-voltage and over-temperature, and solve it
7	Welding current is run away and can be not controlled		The potentiometer damaged	Check or change it
			The control circuit damaged	Check the circuit
8	The crater current can be not adjusted		The PCB damaged	Check it
9	No post-gas		The PCB damaged	Check it

5.3Electrical schematic drawing

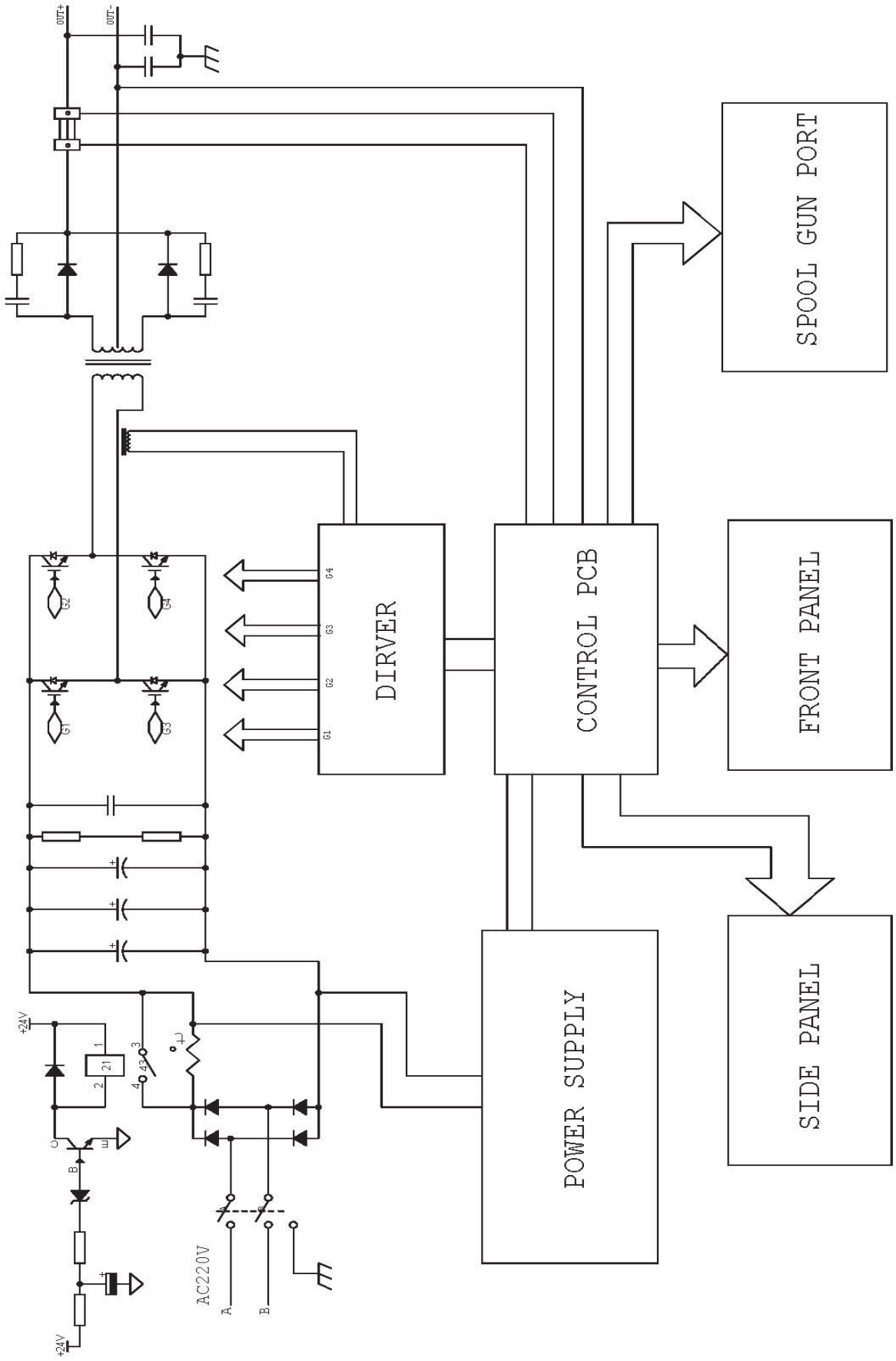

NOTES

CONTACT DETAILS
Dynaweld Industrial
Supplies Pty. Ltd.
5 Sheridan Close
Milperra NSW 2214
Phone: (02) 9772 1144
Fax: (02) 9771 5375
www.bossweld.com.au